If we can be of any assistant or if you have any questions, please don't hesitate to contact us at (847) 360-9170.

You may also visit our website at
https://www.diecastmachinery.com

Thank you!

$30.00

STERLCO®

Operation and Installation Manual

6017 Series Large Hot Oil Temperature Control Units

Important! **Read Carefully Before Attempting to Install or Operate Equipment**

Part No. 682.91540.00 Revision 2 Bulletin No. SC1-655

Write down your unit serial number(s) _____ _____

here for future reference _____ _____

_____ _____

_____ _____

Sterling/Sterlco is committed to a continuing program of product improvement.
Specifications, appearance, and dimensions described in this manual
are subject to change without notice.

© Copyright Sterling/Sterlco and Sterling, Inc. 2003
All rights reserved.
Effective 10/17/2003
Part No. 682.91540.00 Revision 2 Bulletin No. SC1-655

Safety Considerations

Sterling/Sterlco 6017 Series large hot oil temperature control units are designed to provide safe and reliable operation when installed and operated within design specifications, following national and local safety codes.

To avoid possible personnel injury or equipment damage when installing, operating, or maintaining this equipment, use good judgment and follow these safe practices:

- ☑ Follow all **SAFETY CODES**.
- ☑ Wear **SAFETY GLASSES** and **WORK GLOVES**.
- ☑ Disconnect and/or lock out power before servicing or maintaining the hot oil temperature control unit.
- ☑ Use care when **LOADING**, **UNLOADING**, **RIGGING**, or **MOVING** this equipment.
- ☑ Operate this equipment within design specifications.
- ☑ **OPEN**, **TAG**, and **LOCK ALL DISCONNECTS** before working on equipment. You should remove the fuses and carry them with you.
- ☑ Make sure the hot oil temperature control unit and components are properly **GROUNDED** before you switch on power.
- ☑ Do not jump or bypass any electrical safety control.
- ☑ Do not restore power until you remove all tools, test equipment, etc., and the hot oil temperature control unit and related equipment are fully reassembled.
- ☑ Only **PROPERLY TRAINED** personnel familiar with the information in this manual should work on this equipment.

Table of Contents

1 General Information 7

1-1 Introduction 7
1-2 Necessary Documents 7
1-3 Models Covered 8
1-4 Standard Features 8
1-5 Available Options 9
1-6 Feature Descriptions 9

2 Shipping Information 17

2-1 Unpacking and Inspection 17
2-2 In the Event of Shipping Damages 17
2-3 If the Shipment is Not Complete 18
2-4 If the Shipment is Not Correct 18
2-5 Returns 18

3 Installation 19

3-1 Work Rules 19
3-2 Installation Requirements 19
3-3 Connecting Piping 20
3-4 Making Electrical Connections 26

Table of Contents

4 Startup Preparations 29

4-1 Starting the Unit 29
4-2 Shutting Down the Unit 32
4-3 Returning Fluid to the Tank 32

5 Using Controls and Indicators 34

5-1 The Microprocessor Controller 34
5-2 Identifying M2B Controller Panel Components 35
5-3 Using M2B Controller Keys 37
5-4 Identifying Control Panel Switches 39
5-5 Identifying System Status Board Indicators 41

6 Preventive Maintenance 46

6-1 Periodic Checks 46
6-2 Routine Servicing 47
6-3 Draining the Unit for Storage 50
6-4 Corrective Maintenance 50
6-5 Maintaining the Pump .....See Addendum

7 Troubleshooting 52

Charts and Figures

1	6017 Series Hot Oil Large Temperature Control Unit and Specifications	16
2	6017 Unit Piping Setup	16
3	Typical Flow Schematic	24
4	Typical M2B Graphic and Button Control Panel	34
5	Control Panel Switches	39
6	System Status Board Indicators	41

1 General Information

1-1 Introduction

Your Sterling/Sterlco 6017 Series hot oil temperature control unit circulates thermal transfer-type oil through your process and to precisely, automatically, and reliably maintain it at a temperature you can select. The operating range of your temperature control unit is from 100°F to 550°F (38°C to 288°C). The unit is best suited for use with SterlTherm™ Heat Transfer Fluid. A recommended list of commercially available heat transfer fluids can be obtained through Sterling Customer Service.

Rapid recirculation of the fluid provides a close and uniform temperature relationship between the **TO PROCESS** and **FROM PROCESS** lines. This does, of course, depend on the configuration of your process, and any restrictions within the mold.

This recirculation, combined with the immersion heater and optional cooling capability, gives fast and accurate response to bring the fluid up to temperature, or to changes in the settings when needed.

Performance is assured through matching the unique Sterlco controllers to the Sterlco high temperature system. The two systems are fully integrated to achieve accurate control.

1-2 Necessary Documents

The following documents are necessary for the safe installation, operation, and maintenance of your Sterling/Sterlco 6017 Series hot oil large temperature control unit. You can obtain additional copies from Sterling, Inc. Make sure that appropriate personnel are familiar with these documents:

- ☑ This manual.
- ☑ The electrical schematic and connection diagram in the control enclosure.
- ☑ The manuals for accessories and options you've selected.
- ☑ The customer parts list in the control enclosure.

1-3 Models Covered

This manual lists installation, operation, and maintenance instructions for the 6017 Series hot oil large temperature control unit.

Model numbers are listed on the serial tag. A model number followed by **-Q** indicates a specially constructed unit, and not all information in this manual may apply. Make sure that you know the model number, serial number, and operating voltage of your unit if you contact Sterling, Inc.

1-4 Standard Features

- M2B microprocessor controller with fuzzy logic; includes diagnostic features with indicator and warning status lights
- Non-fused lockable rotary disconnect
- Dual stage immersion heater with IEC contactors
- 550°F (288ºC) maximum operating temperature
- Branch fusing
- System status graphic display
- Pressure switch for low pump pressure shut-down
- NEMA 12 electrical enclosure
- UL listed subpanel
- To Process pressure gauge
- Independent safety thermostat
- Y strainer on From Process line
- A packed positive displacement pumps capable of reversing to evacuate the process
- Easily removable panels for quick access to internal components
- Audible alarm

1-5 Available Options

- Drain valve
- Manual bypass
- Hour meter; measures total pump run time hours
- General fault visual alarm
- Automatic venting sequence
- Low level alarm for reservoir
- M2B microprocessor controller options include:
  - 4-20 mA remote set point and retransmission
  - SPI protocol, RS-485
  - General protocols, types RS-232, -485
  - Remote sensor
- Heat exchanger options of
  - 3.9 sq. ft. (0.3627 sq. m)
  - 6.7 sq. ft. (0.6231 sq. m)
  - 13 sq. ft. (1.21 sq. m)
  - 21 sq. ft. (1.96 sq.m)
  - 27 sq. ft. (2.51 sq. m)
- Remote controller
- Lexan cover
- Mechanical Seal Pump
- Optional operating voltages of 208/3/60, 230/3/60, 575/3/60, 380/3/50, and 415/3/50
- Provisions for a Nitrogen Blanket on the Reservoir can drastically increase fluid life.

1-6 Feature Descriptions

Immersion Heaters

The fluid is heated by the specially designed three-phase low watt density electrical immersion heater, and regulated by the controller. The standard heater has a steel sheath for low watt density and good heat transfer.

These models can be supplied with 50, 60, 75, 100, 120, 150, and 200 kW low watt density immersion heaters, depending upon the heating needs of the process. All models are built to provide full or partial heat as required by the process and determined by the controller, to provide more precise control.

Heater Tank

The 6017 features a single pass heater tank. The tank is designed to maintain an optimum balance of fluid velocity versus watt density, and turbulence for excellent heat transfer, and minimal pressure drop. The high fluid velocity will greatly prolong the life of the heater and fluid.

Pump

The pump is a packed, positive displacement pump. It features a nearly failure free design, and has proven itself after years of dependable service. It is well suited for use with a variety of commercially available heat transfer fluids. The pump has only two internal moving parts, and a specially designed seal to give years of trouble free service, even at high temperatures. The only routine maintenance required is weekly greasing and occasional packing and headspace adjustment; see Chapter 6 on Page 47 for more information.

The pump is capable of running in either direction. Thus, the pump reverse feature can be used to draw fluids back from the process. It is not necessary to install a service air line to purge the lines before changing molds. Since the pump is capable of achieving extremely high pressures, it is necessary to regulate the pressure through use of a regulating by-pass line (Fulflo valve). Because the pump is a positive displacement pump, it will supply the process with rated flow at or below the rated pressure.

The flow is constant until the pressure reaches the rated pressure. The pressure however is a function of frictional losses through the process that it is attached to. Systems with large process connections, ports, and piping will operate at low pressures. While systems with small process connections, ports, and piping will operate at higher pressures. Once the pressure requirements exceed the rated pressure, the fulflow valve will open and bypass the necessary fluid to prevent high pressures.

Ful-Flo Valve

A regulating by-pass line featuring a Fulflo valve is standard in all units. This is a safety device to prevent excessive pressure in the event that the delivery line is obstructed. Each Fulflo is factory preset to limit system pressure as specified by the customer. It must not be tampered with in any way.

In the event of an obstruction in the line, the Fulflo will open and divert fluid from the delivery **TO PROCESS** line to the return From Process line. A constant flow of fluid is maintained through the heater tank to prevent damage to the heating elements and fluid.

Cooling

Optional

The Sterlco-designed shell and tube heat exchanger is provided as optional equipment in this unit. The design features U-tube construction and copper-nickel tubes for durability and optimal heat transfer.

The modular construction (unique to Sterlco units) allows the tube bundle to be easily removed for periodic cleaning. Additionally, check valves are installed on the water supply and drain lines to prevent water from back flowing into the heat exchanger from a closed drain or into the water supply piping.

The controller automatically regulates cooling by opening and closing the cooling solenoid. This allows the proper amount of oil to pass over the tubes of the heat exchanger. A water supply of 75 psi (517.1 kPa/5.2 bars) maximum is required for connection to the heat exchanger.

Connection Lines

Connections for **TO PROCESS** and **FROM PROCESS** lines are:

- 2" NPT (50.8 mm) at 90 gpm (341 lpm)
- 2-1/2" NPT (63.5 mm) at 150 gpm (568 lpm)
- 3" NPT (76.2 mm) at 200 gpm (757 lpm)

Water connections for **COOLING WATER SUPPLY** and **COOLING WATER DRAIN** are:

- ¾" NPT (19.1 mm) for 3.9 & 6.7 sq. ft. heat exchangers.
- 1" NPT (25.4 mm) for 13, 21, & 27 sq. ft. heat exchangers.

(See Chapter 3.) ***The customer is responsible for conversions to metric standards.***

Sterling stocks many lengths of flexible metal hose; the part number is 572-16969. State the length of hose you want when ordering.

⚠ WARNING

Component failure may result in high-temperature oil spray, causing serious injury or death.

Make sure hoses, valves, and other components installed in your process can withstand maximum temperature and pressure of the 6017 unit; check unit nameplate for specific capacities.

All components must be carefully inspected for condition before installing. Make sure you have factory components if you have any doubt.

Electrical System Controls

The electrical controls of your 6017 unit are specially engineered for reliability, safety and simplicity of operation. The switches are clearly labeled as to their function. Your 6017 unit has a system status board so you can evaluate the status and performance of the unit at a glance. Pilot lights are provided to indicate key unit functions.

An audible alarm is standard with your unit. The alarm will sound in the event of the following conditions:

- motor overload
- safety thermostat trip (over temperature)
- low fluid pressure
- low fluid level (optional)
- high fluid level (optional)

Push the **ALARM SILENCE** button to silence the alarm. See Chapter 4 for more information on control functions.

Electrical Panel and System Components

The pump motor and immersion heater operate on three-phase, 50/60 cycle, nominal voltage with the control circuit at 115 V single phase. The control circuit voltage is provided by a single phase machine tool transformer with primary fuse protection and a grounded secondary. A main power disconnect is included as for ease of service. The electrical panel is UL listed and complies with NEC provisions.

All components are IEC rated for long life and reduced maintenance. The heater elements are branch fused, and protected from contactor welding by a separate primary voltage contactor. The pump motor is controlled by a full voltage magnetic reversing starter, with fused branch circuit overcurrent and thermal overload protection. Many additional features are available as options.

A NEMA 12 enclosure is standard, with NEMA 4 available as an option.

Air Purge

Upon initial start-up and mold/process change-out, you'll need to purge all air and water from the system. The 6017 unit has appropriate valving to ensure complete purging. Procedures are covered in Chapter 3.

⚠ WARNING

Failure to purge the system of air before heating may result in serious injury or critical system and equipment damage.

Make sure you properly purge the system of air *before* starting the heater cycle.

Pressure Switch

A pressure switch is built into each unit to guard against heater damage. This feature prevents the heater elements from being energized unless the pump is running and fluid is in the system. After a preset time, the pump shuts down if the fluid pressure is not re-established. The pressure switch is preset at the factory; **do not tamper with it**.

Safety Thermostat

The safety thermostat is mounted on the side of the heater tank. This is to guard against the unlikely event of “runaway” heating. If overheating does occur, the safety thermostat shuts down the heater outputs and sounds an audible alarm. A red pilot light on the status board also illuminates. The unit continues to pump fluid through the system to prevent heater damage. Auxiliary factory installed alarms such as beacons and klaxons are available as options.

The safety thermostat is a manual reset type. All controller functions are locked out until the red "STOP" button is pushed. It is imperative that a qualified maintenance technician determine and correct the cause of the fault **before** resuming operation.

Reservoir Tank

A reservoir tank with sight gauge is standard; usable capacity is

- 40 gallons (151 liters) on 6017L & 6017M units
- 65 gallons (246 liters) on 6017P & 6017V units.

The tank permits thermal expansion of the heat transfer fluid, and provides make-up fluid.

⚠ WARNING

The reservoir tank may cause serious injury if it ruptures from not being properly vented.

Make sure that the reservoir tank is always properly vented to prevent tank rupture.

Figure 1
6017 Series Hot Oil Large Temperature Control Unit.
The unit shown below is a 6017P Model.

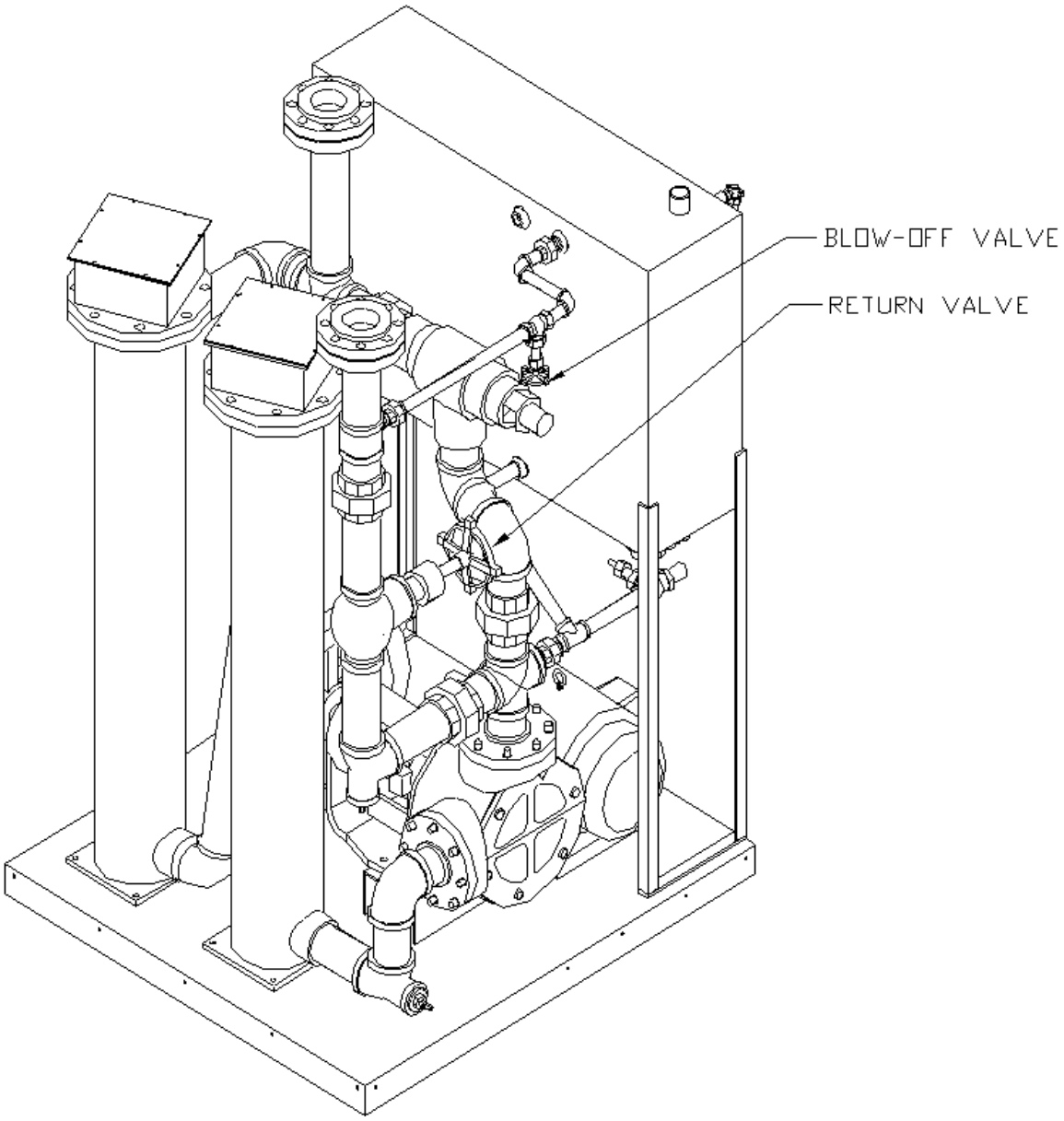

6017 Series Temperature Control Unit Specifications

Model Number	Heaters Available capacities				Pump Available capacities			Dimensions H		W		D		Shipping Weight♠	
460 / 230	50 kW	100 kW	150 kW	200 kW	90 gpm	150 gpm	200 gpm	in.	cm	in.	cm	in.	cm	lbs.	Kg
6017-L	✓	✓	n/a	n/a	✓	✓	n/a	62”	158	30”	76	60"	153	1,900	862
6017-M	✓	✓	n/a	n/a	✓	n/a	n/a	62”	158	30”	76	60”	153	1,900	862
6017-P	✓	✓	✓	✓	✓	✓	✓	62”	158	46”	117	60”	153	3,200	1,452
6017-V	✓	✓	✓	✓	✓	✓	✓	62”	158	46”	117	60”	153	3,200	1,452

♠ ***The actual shipping weights may vary based on options selected. The shipping weights listed are the maximum shipping weights for standard units of the listed cabinet size.***

2 Shipping Information

2-1 Unpacking and Inspection

You should inspect your Sterling/Sterlco 6017 Series hot oil large temperature control unit for possible shipping damage. If the container and packing materials are in re-usable condition, save them for reshipment if necessary.

Thoroughly check the equipment for any damage that might have occurred in transit, such as broken or loose wiring and components, loose hardware and mounting screws, etc. In case of breakage, damage, shortage, or incorrect shipment, refer to the following sections.

2-2 In the Event of Shipping Damages

Important!

According to the contract terms and conditions of the Carrier, the responsibility of the Shipper ends at the time and place of shipment.

- ☑ Notify the transportation company's local agent if you discover damage.
- ☑ Hold the damaged goods and packing material for the examining agent's inspection. **Do not return any goods to Sterling, Inc. before the transportation company inspection and authorization**.
- ☑ File a claim against the transportation company. Substantiate the claim by referring to the agent's report. A certified copy of our invoice is available upon request. The original Bill of Lading is attached to our original invoice. If the shipment was prepaid, write us for a receipted transportation bill.
- ☑ Advise Sterling, Inc. regarding your wish for assistance and to obtain an RGA (return goods authorization) number.

2-3 If the Shipment is Not Complete

Check the packing list. The apparent shortage may be intentional. Back-ordered items are noted on the packing list. You should have:

- ☑ 6017 Series hot oil large temperature control unit
- ☑ Bill of lading
- ☑ Packing list
- ☑ Operating and Installation packet
- ☑ Electrical schematic and panel layout drawings
- ☑ Component instruction manuals

Re-inspect the container and packing material to see if you missed any smaller items during unpacking. Determine that the item was not inadvertently taken from the area before you checked in the shipment. Notify Sterling, Inc. immediately of the shortage.

2-4 If the Shipment is Not Correct

If the shipment is not what you ordered, **contact Sterling, Inc. immediately**. For shipments in the United States and Canada, call 1 (800) 783-7835 or 1 (414) 354-0970. Include the order number and item. *Hold the items until you receive shipping instructions*.

2-5 Returns

Important!

Do not return any damaged or incorrect items until you receive shipping instructions from Sterling, Inc.

3 Installation

3-1 Work Rules

The installation, operation, and maintenance of this equipment must be conducted in accordance with all applicable work and safety codes for the installation location. This may include, but is not limited to OSHA, NEC, CSA, and any other local, national, and international regulations.

- Read and follow these instructions when installing, operating, and maintaining this equipment. If the instructions become damaged or unreadable, obtain additional copies from Sterling/Sterlco.
- Only qualified personnel familiar with this equipment should work on or with this hot oil temperature control unit.
- Work with approved tools and devices.
- Disconnect the electricity **before** maintenance or service. If the unit is installed with a power cord that can be unplugged, unplug it. If the unit is permanently wired to a power main, make sure that a fused power disconnect is installed to allow the disconnect to be locked in the **OFF** position. Open and lock out the disconnect installed in the control enclosure.

3-2 Installation Requirements

Make sure that you meet the following requirements when installing and operating your 6017 hot oil temperature control unit.

Installation Location Considerations

Locate the 6017 unit as close as possible to the process for proper circulation and temperature control. Take care when selecting a location. The area surrounding the unit must be free of obstructions to ensure proper ventilation of internal components. **Allow a minimum clearance of at least 30 inches (76 cm).**

Make sure that the unit location is not in a confined space to ensure proper air circulation. Special air circulation/ventilation is required for units operating at temperatures exceeding 500ºF (260ºC). Vapors can escape from areas such as the reservoir tank during high temperature operation.

⚠ CAUTION

Harmful vapors may be generated from thermal fluid during high temperature operation.

Prolonged or repeated exposure of these hot-generated vapors may result in eye and respiratory tract irritation.

Avoid contact or inhaling harmful amounts of material. Consult the Material Safety Data Sheet (MSDS) for precautions and instructions for the thermal fluid you are using.

Note: Before storing your 6017 temperature control unit, make sure you remove all residual water with compressed air to avoid a potential freezing hazard.

Note the following table of ambient temperature ranges permitted for storage and operation:

Ambient storage range		Ambient operation range	
ºF	ºC	ºF	ºC
-40ºF to 185ºF	-40ºC to 85ºC	-4ºF to 120ºF	-20ºC to 49ºC

You should preheat the process heat transfer fluid first if you want to start the unit below an ambient temperature of 30ºF (-1ºC).

3-3 Connecting Piping

Make sure that all external piping is properly sized to reduce external pressure drop as much as possible. Do not install process or water supply/drain piping smaller than the fittings on the unit. If the water supply piping is larger than unit fittings, reduce the pipe size at the unit.

The following table lists 6017 TCU pipe sizes.

Connections for **TO PROCESS** and **FROM PROCESS** lines are:

- 2" NPT (50.8 mm) at 90 gpm (341 lpm)
- 2-1/2" NPT (63.5 mm) at 150 gpm (568 lpm)
- 3" NPT (76.2 mm) at 200 gpm (757 lpm)

Water connections for **COOLING WATER SUPPLY** and **COOLING WATER DRAIN** are:

- ¾" NPT (19.1 mm) for 3.9 & 6.7 sq. ft. heat exchangers.
- 1" NPT (25.4 mm) for 13, 21, & 27 sq. ft. heat exchangers.

The customer is responsible for conversions to metric standards.

Notes: Always use a backup wrench to support 6017 unit piping when making connections. Make sure all external piping is supported **independently** of the 6017 unit.

Sterling, Inc. recommends that you have strainers installed on the cooling water inlets and customer-supplied shut-off valves on all piping connections. Use common black welded pipe for permanent installations.

The 6017 is designed to operate with an open, unrestricted drain line. Steam rapidly expands within the heat exchanger, so any overpressure condition from backpressure or standing columns of water against the drain **must be avoided**.

If you must use a pipe joint compound, use a compound that can withstand the high temperatures and pressures of your 6017 unit. Always insulate all piping to prevent burn hazards and to retain heat. Make sure insulation is properly rated for maximum operating temperatures of your 6017 unit.

Piping Considerations for Mobile Installations

Because your 6017 unit is not fitted with casters, it should be secured to the floor with the appropriate hardware. You can purchase high-quality flexible metal hose from Sterling/Sterlco to allow for thermal expansion of the process piping; state the length you want when ordering.

Connecting Process Piping

⚠ CAUTION

- **Hoses, valves and other components in your process must be able to withstand the 6017 unit's maximum temperatures and pressures.**
- **Maximum temperatures and pressures are listed on the unit nameplate.**
- **Carefully inspect all components before installation.**
- **If in doubt about component suitability, obtain factory components.**
- **Fix all leaks! Fluid can be a potential fire and slip hazard.**
- **Never open pipe insulation that is smoking! Adding oxygen can cause a fire.**

Connecting Cooling Water Piping

You must provide cooling water at 25 psi to 75 psi (172.4 kPa to 517.1 kPa/1.7 bars to 5.2 bars) for proper operation. Untreated water can foul or corrode the heat transfer surfaces, slowing water flow and causing fluid temperature control problems. Sterling, Inc. sells a complete line of water treatment equipment that can reduce downtime and maintenance costs.

Run properly-sized cooling water lines-never smaller than the outlets on the 6017 unit. If external piping is larger than 6017 unit connections, reduce the size of the piping at the unit.

Connecting Vent Piping

You must leave the vent connection open to the atmosphere at all times. The vent connection is located on top of the reservoir. On systems with piping above the reservoir level, you **must** run vent piping to a minimum height of one foot (1’ / 31 cm) above the highest point in the system. Run the piping down into an auxiliary vented overflow chamber, such as a vented, *covered* 55-gallon (208-liter) drum. This practice ensures that overflow will not create a hazard to personnel.

Remember: All external piping must be supported independently of the 6017 unit.

⚠ CAUTION

The reservoir tank must be vented to prevent pressurization. A pressurized reservoir could rupture, allowing hot fluid to escape and become a potential fire and slip hazard.

Note: Heat transfer fluids expand when heated. Expansion rates vary, depending on fluid types and temperatures. For more information on expansion rates, refer to specification information for the heat transfer fluid you select.

Generally, most heat transfer fluids expand at the rate of 2.5% for every increase of 50°F from temperatures above 60°F (16°C).

Connect the **TO PROCESS** hookup to the entrance of the process and the **FROM PROCESS** hookup to the exit of the process. Connect the **COOLING WATER SUPPLY** to your plant water supply. Connect the **COOLING WATER DRAIN** line to an open drain, or to the return line of your central water system. If returning to a central water system, use a condensate/return tank to avoid a standing water column on the heat exchanger drain line.

⚠ CAUTION

If you are routing the drain line to an open drain, make sure that the line is directed away from personnel to avoid scalding.

Carefully select connecting lines and connectors between the 6017 unit and the process to best meet the needs and requirements of your application.

Make sure lines and connectors have a service rating of at least 100 psig (689.5 kPa/6.9 bars), and a temperature rating at least equal to the maximum operating temperature of your 6017 unit.

Figure 3
Typical Flow Schematic

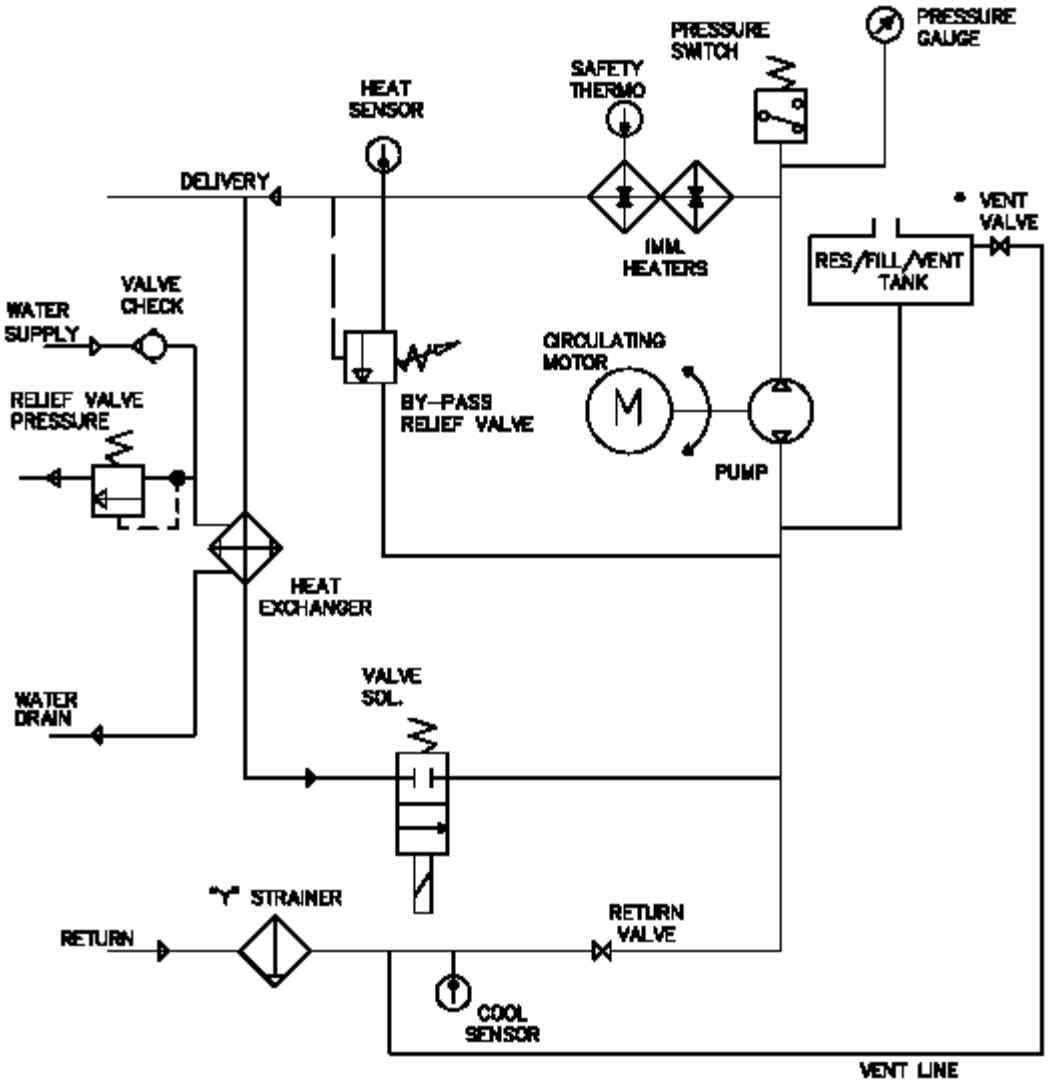

Note: The heat exchanger is optional, and the "Vent Valve" is also known as the "Blow-Off Valve."

- Vent Valve - open for purge/closed for run/open for pump reverse.
- Return Valve - closed for purge/ open for run/ closed for pump reverse.
- Reservoir Tank - Open to atmosphere at all times, unless nitrogen blanket provisions are present.

Figure 4
Custom Process Piping

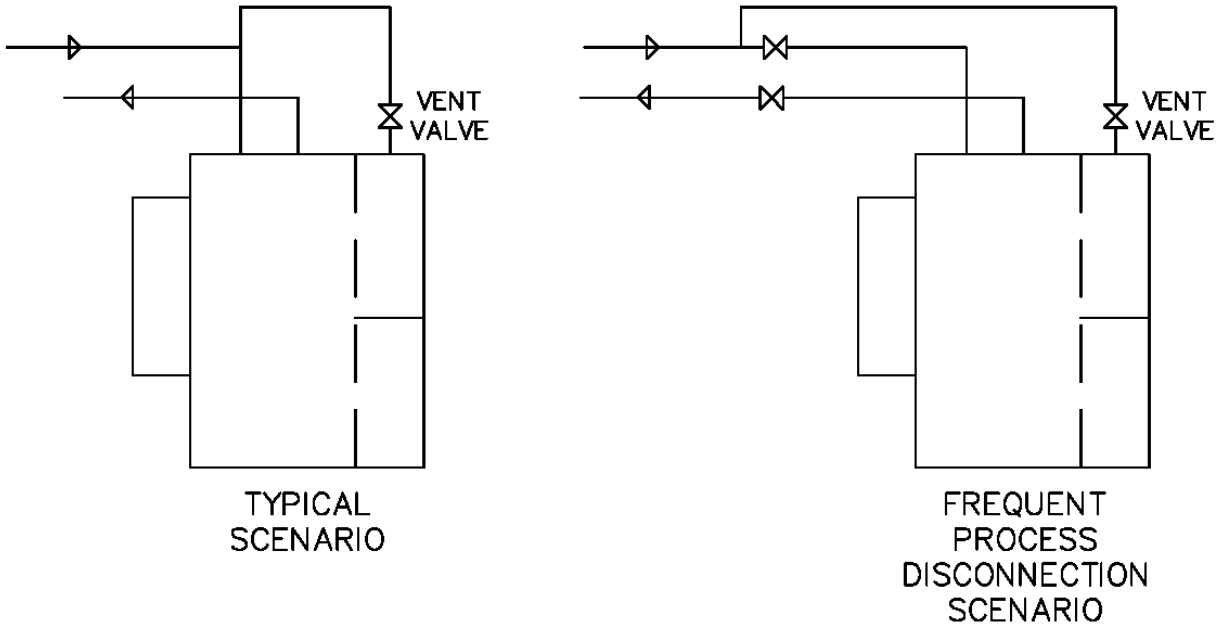

The optimum location for venting is on the top of the overhead return piping above the unit. The customer is encouraged to add an extra vent (Blow-Off) valve at this point. With this new Blow-Off Valve location the return valve and internal blow-off valve should be closed completely during venting. Otherwise air could be pulled into the piping by gravity instead of being removed.

The frequent process disconnection scenario has the vent line connected to the process side of the two isolation valves. This allows the disconnected process to be vented without contaminating the rest of the piping and unit to be contaminated with air. This is accomplished by the following steps once the process is reconnected to the unit and the isolation valves are still closed.

Note: during this process the internal blow-off valve is closed and the return valve can be open.

1.) Open the external vent valve.
2.) Open the isolation valve that is delivering oil to the process from the unit. Leave the isolation valve that is returning the oil from the process to the unit closed.
3.) Wait for all of the process to fill with heat transfer fluid and push the air and back to the reservoir.
4.) Once all of the air has been replaced with fluid, and only oil is being dumped into the reservoir; close the vent valve.
5.) Open the isolation valve that is returning the oil from the process.

3-4 Making Electrical Connections

These units are designed for three-phase voltage operation. Refer to the unit nameplate for proper voltage and amperage requirements, and make sure your electrical service conforms.

Check the unit nameplate for correct voltage and amperage *before* making electrical connections!

⚠ CAUTION

1. **Provide a correctly sized and protected power supply to the unit.**
2. **If an electrical supply disconnect is not installed as a factory option, the customer is responsible to properly size and install a suitable disconnect.**
3. **Refer to National Electric Code (NEC) 430-24-26 for proper feed conductor and supply disconnect sizing.**
4. **Voltages must be within plus or minus ten percent (±10%) of the nameplate rating.**
5. **Maintain a safe ground and disconnect the power supply before servicing the unit.**

A qualified electrician should make electrical connections and disconnect the electricity when service calls are needed.

- Locate disconnects in an **easily accessible location.** Operators should not have to squeeze around the 6017 unit to reach disconnects, especially in case of emergency.
- When running conduit whips to the 6017 unit, make sure that whips are routed away from hot piping.

Check the unit nameplate for correct voltage and amperage *before* making electrical connections!

⚠ DANGER

IMPROPER ELECTRICAL CONNECTIONS CAN DAMAGE THE UNIT AND CAUSE SERIOUS OPERATOR INJURY OR DEATH!

MAKE SURE THAT ALL ELECTRICAL CONNECTIONS ARE MADE BY A QUALIFIED ELECTRICIAN, AND THAT ALL CONNECTIONS ARE TIGHT.

Make all electrical supply connections at the front of the unit. An access panel covers all electrical connections. Run electrical connections to the supply terminals from either side of the unit. Make sure that all three phases are wired correctly. *The pump runs backwards if not wired properly.*

- Notes -

4 Startup Preparations

4-1 Starting the Unit

UNIT START-UP (WITH MANUAL BLOW-OFF VALVE)

The highly engineered controls and controller make this unit almost self operating. Before you can begin heating, it will be necessary to perform the following start up procedures. This will ensure that all air is vented from the system to prevent fluid degradation and damage to the heater.

1. Open the Return Valve and the Blow-Off Valve. Make sure the drain valves are closed and plugged.

2. Add fluid to the reservoir tank until the level is near the top of the sight glass.

3. Close the Return Valve inside the unit.

4. Depress the "Pump Start" button to start the pump. Check motor rotation by observing the pressure gauge. If the gauge indicates positive pressure, rotation is correct. If not, disconnect power and reverse the incoming power leads.

5. As fluid is drawn out of the reservoir tank to fill the process, the fluid level will fall in the tank. Continue to add fluid to maintain the level about 4 inches from the bottom of the sight glass.

⚠ CAUTION

You must purge the system of air before the heating cycle.
Personal injury and system damage can occur from a pressurized system.

6. Air and Oil will be vented through the Blow-Off Valve and into the reservoir tank.

7. After the unit stops requiring more oil and has at least 5 psi of pressure, open the Return Valve half way.

8. Once the unit has stopped requiring more oil again and has at least 10 psi of pressure, select a set point of 100°F (38°C) and switch unit into the "Auto" mode. As the oil warms up, viscosity will decrease, and the pressure will fall.

9. In 2-minute intervals increase the setpoint to 150°F (66°C) and 200°F (93°C).

10. If any water is present in the system, it must be boiled off before continuing operation. Select a setpoint of 215°F (102ºC) and observe the reservoir tank vent for any signs of escaping steam. Continue to run at 215ºF (102ºC) until no more steam appears and pressure has stabilized.

11. When fluid level has stabilized and air and water are purged from the system, open the Return Valve all the way. And select a setpoint of 250°F (121°C).

12. If the fluid level and pressure remain stable close the Blow-Off Valve. Do not open the Blow-Off Valve above 250°F.

With the system properly purged, only 4 - 6" of fluid should be visible in the sight glass. This will allow for expansion of the fluid as it heats, as well as capacity for process fluid when the pump is reversed and fluid withdrawn from the mold.

The 6017 is now ready for use. All that is required is to select a process set point on the controller as described in the controller manual.

NOTE: If all traces of water are not removed from the system, severe cavitation may occur at elevated temperatures. Indications are a “gravely” sounding pump, fluctuating or dropping pressure, or rapidly rising fluid level in the expansion tank. Repeat Steps #9-12 if this occurs.

UNIT START-UP (WITH AUTOVENT SOLENOID)

The highly engineered controls and controller make this unit almost self operating. Before you can begin heating, it will be necessary to perform the following start up procedures. This will ensure that all air is vented from the system to prevent fluid degradation and damage to the heater. The autovent solenoid operates just like the manual Blow-Off valve, however it opens electrically and for only a specified time. The benefit is that it vents every time the unit is started and it will automatically shut off after a predetermined amount of time. It is also convenient, because the vent button is located on the front of the unit. It has the added safety of being automatically prevented from opening above 250°F by a safety thermostat.

1. Open the Return Valve. Make sure the drain valves are closed and plugged.

2. Add fluid to the reservoir tank until the level is near the top of the sight glass.

3. Depress the "Pump Start" button to start the pump. Check motor rotation by observing the pressure gauge. If the gauge indicates positive pressure, rotation is correct. If not, disconnect power and reverse the incoming power leads.

4. Close the Return Valve inside the unit.

5. As fluid is drawn out of the reservoir tank to fill the process, the fluid level will fall in the tank. Continue to add fluid to maintain the level about 4 inches from the bottom of the sight glass.

⚠ CAUTION

You must purge the system of air before the heating cycle.
Personal injury and system damage can occur from a pressurized system.

6. Air and Oil will be vented through the automatic Blow-Off Valve and into the reservoir tank.

7. After the unit stops requiring more oil and has at least 5 psi of pressure, open the Return Valve half way. If the Blow-Off cycle times out, start the sequence again. The timer is factory set at 5 minutes. A longer time can be set if required. The first time the unit is filled with oil it takes some time to vent out the air. You should determine how long is appropriate for venting on a regular basis when the unit is already full.

8. Once the unit has stopped requiring more oil again and has at least 10 psi of pressure, select a set point of 100°F (38°C) and switch unit into the "Auto" mode. As the oil warms up, viscosity will decrease, and the pressure will fall.

9. In 2-minute intervals increase the setpoint to 150°F (66°C) and 200°F (93°C).

10. If any water is present in the system, it must be boiled off before continuing operation. Select a setpoint of 215°F (102ºC) and observe the reservoir tank vent for any signs of escaping steam. Continue to run at 215ºF (102ºC) until no more steam appears and pressure has stabilized. Restart the Blow Off cycle as necessary if it times out.

11. When fluid level has stabilized and air and water are purged from the system, open the Return Valve all the way. And select a setpoint of 250°F (121°C). Restart the Blow Off cycle as necessary if it times out.

12. If the fluid level and pressure remain stable allow the Blow-Off Valve to close. The vent valve will not open the Blow-Off above 250°F.

With the system properly purged, only 4 - 6" of fluid should be visible in the sight glass. This will allow for expansion of the fluid as it heats, as well as capacity for process fluid when the pump is reversed and fluid withdrawn from the mold.

The 6017 is now ready for use. All that is required is to select a process set point on the controller as described in the controller manual.

NOTE: If all traces of water are not removed from the system, severe cavitation may occur at elevated temperatures. Indications are a “gravely” sounding pump, fluctuating or dropping pressure, or rapidly rising fluid level in the expansion tank. Repeat Steps #9-12 if this occurs.

4-2 Shutting Down the Unit

UNIT SHUT DOWN (WITH AUTOVENT SOLENOID OR MANUAL VENT VALVE)

Cool the unit down by switching the **Mode** switch to the "Manual Cool" position. This will disable the heaters (i.e. prevent the controller from turning them on) and open the cool solenoid. Fluid temperature can be monitored on the controller display during cool down. When fluid temperature is below 120ºF, depress the **PUMP STOP** button to turn the unit off.

4-3 Returning Fluid to the Tank

RETURNING FLUID TO TANK

If the unit is to be moved from one process to another (i.e. mold changes, etc.), the following steps must be taken to drain the mold and process lines. Note that this is just the opposite of unit start up/air purge:

1. Cool fluid to 150°F (66°C) maximum.
2. Depress the **PUMP STOP** push button.
3. Close the Return Valve.
4. Open the Blow Off Valve. (with autovent, the valve will open on its own)
5. Depress and hold the **PUMP REVERSE** push-button. The pump will then run in reverse, drawing fluid from the mold and lines, and into the reservoir tank.
6. Watch the sight glass to prevent overflow of the reservoir tank.

⚠ CAUTION

The reservoir tank may not have adequate volume to contain the total system capacity of fluid.

An overflowing reservoir allows hot fluid to escape and become a potential fire and slip hazard.

The total capacity of the tank can be found on page 14.

If it appears that the tank may overfill, connect a line from the **FILL** port of the reservoir tank to a **clean** auxiliary container.

- Notes -

5 Using Controls and Indicators

5-1 The Microprocessor Controller

The M2B controller is an easy-to-operate microprocessor-based PID control device. When the process reaches the set point, the PID control cycles the cooling valve and/or immersion heater to maintain the proper leaving fluid temperature.

The controller is fully factory tested. Set the process temperature set point you want and the controller does the rest.

Built-in range of operation on the controller is 0°F to 550°F (-18ºC to 288ºC).

Figure 4
Typical M2B Graphic and Button Control Panel

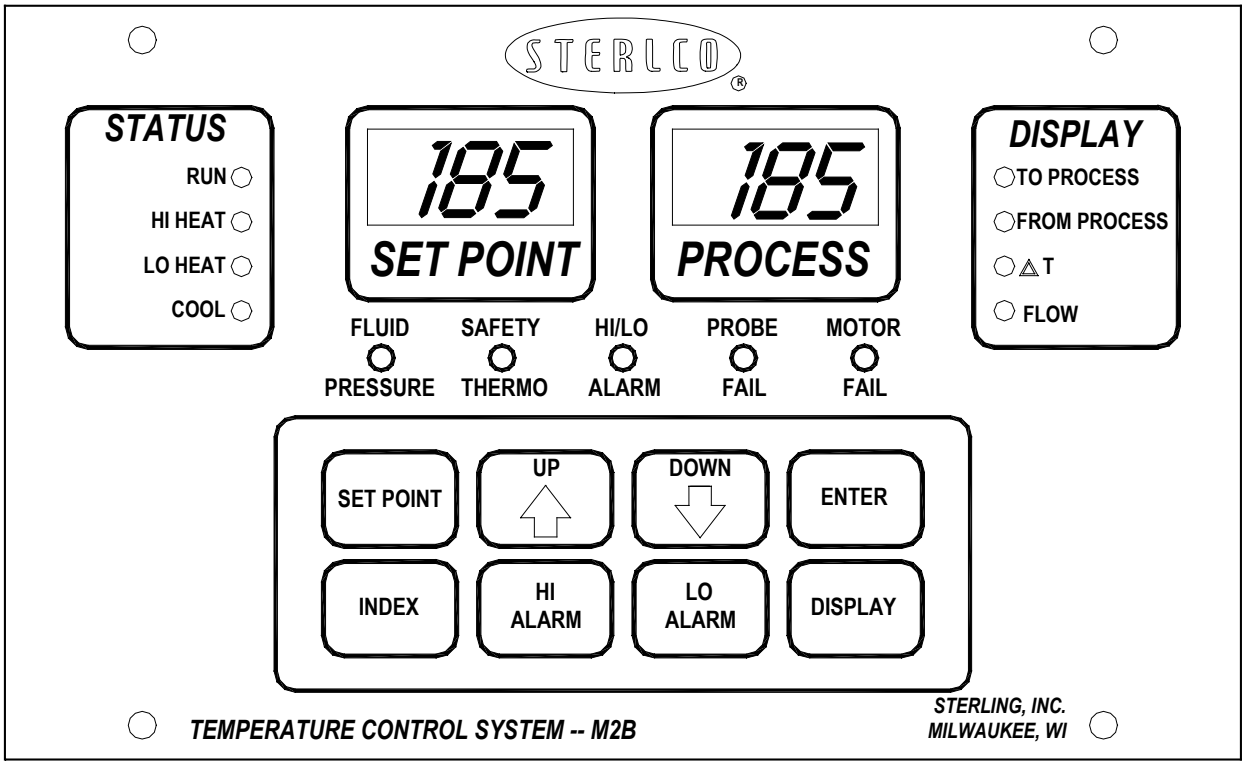

5-2 Identifying M2B Controller Panel Components

Screen Displays

SET POINT Numeric LED

During normal operation, the **SET POINT** LED on the controller displays the process set point you want the unit to maintain. It also displays parameter and pre-set function values during setup.

PROCESS Numeric LED

During normal operation, the **PROCESS** LED on the controller displays the actual process temperature at the To Process thermocouple. It also lists parameter symbols during setup and error messages if an error occurs.

Status Indicators

RUN Indicator

The **RUN** indicator is on during normal operation and flashes during the auto-tuning sequence.

HI HEAT Indicator

The **HI HEAT** indicator is on when fluid heaters are at 100% capacity to rapidly raise fluid temperature.

LO HEAT Indicator

The **LO HEAT** indicator is on when fluid heaters are at 50 percent capacity.

COOL Indicator

The **COOL** indicator is on when fluid temperature is above the set point and is being cooled.

Display Indicators

TO PROCESS Indicator

The **TO PROCESS** indicator is on when the **PROCESS** LED screen on the controller displays the temperature of the outgoing fluid.

FROM PROCESS Indicator

The **FROM PROCESS** indicator is on when the **PROCESS** LED screen on the controller displays the temperature of the incoming fluid.

△T Indicator

The **△T** indicator is on when the **PROCESS** LED screen on the controller displays the difference in temperature between outgoing Delivery fluid and incoming Return fluid.

FLOW Indicator

The **FLOW** indicator is on when the **PROCESS** LED screen on the controller displays the flow of fluid in liters per minute; this function requires the optional flow sensor.

Alarm Indicators

FLUID PRESSURE Indicator

The **FLUID PRESSURE** indicator goes on when fluid pressure is low. The TCU shuts down and resumes operation only when a proper level of fluid pressure is restored.

SAFETY THERMO Indicator

The **SAFETY THERMO** indicator is on when an over-temperature condition occurs. The heater outputs are then disabled, the pump continues to operate, and the **COOL** solenoid energizes. This is a **fatal fault condition**, requiring that main power be disconnected to reset the M2B controller.

HI/LO ALARM Indicator

The **HI/LO ALARM** indicator is on when an individually-set alarm condition occurs. The **HI** deviation is +200ºF (about +93ºC) above the set point. The **LO** deviation is -100ºF (about -37ºC) below the set point. **Alarms reset automatically**.

PROBE FAIL Indicator

The **PROBE FAIL** indicator is on when a temperature sensing probe fails. A delivery probe failure displays DEL on the screen, and a return probe failure displays RET on the screen. The alarm resets after the failed probe is replaced.

MOTOR FAIL Indicator

The **MOTOR FAIL** indicator is on during improper pump rotation, motor out of phase, or thermal motor overload conditions. This is a **fatal fault condition**, requiring that main power be disconnected to reset the M2B controller.

5-3 Using M2B Controller Keys

SET POINT Key

Press and hold the **SET POINT** key, then press the **UP Arrow** key to increase the set point value or press the **DOWN Arrow** key to decrease the set point value displayed on the **SET POINT** LED screen.

UP Arrow Key

Press the **UP Arrow** key to increment or advance the values or settings on the LED screens.

DOWN Arrow Key

Press the **DOWN Arrow** key to decrement or reduce the values or settings on the LED screens.

Important!

Do not change any of the control settings without consulting the Sterling/Sterlco Service Department.

The Sterling, Inc. warranty does not cover TCU failures from tampering with controller settings!

ENTER Key

The ENTER **ENTER** key is used with the INDEX **INDEX** key menu to store the value or the item that was changed. If this key is not pressed, the previously-stored value or item is retained.

INDEX Key

Each press of the INDEX **INDEX** key advances the screen to the next menu item. Refer to your Sterling/Sterlco M2B Temperature Control Owner's Manual for a list of functions available using this key.

HI ALARM Key

Press and hold the HI ALARM **HI ALARM** key, then press the UP **UP Arrow** key to increase the alarm high limit value or press the DOWN **DOWN Arrow** key to decrease the alarm high limit value on the **SET POINT** LED screen. Refer to your Sterling/Sterlco M2B Temperature Control Owner's Manual for a list of functions available using this key.

LO ALARM Key

Press and hold the LO ALARM **LO ALARM** key, then press the UP **UP Arrow** key to increase the alarm low limit value or press the DOWN **DOWN Arrow** key to decrease the alarm low limit value on the **SET POINT** LED screen. Refer to your Sterling/Sterlco M2B Temperature Control Owner's Manual for a list of functions available using this key.

DISPLAY Key

Press the DISPLAY **DISPLAY** key to advance through the display menu. Each key press increments to the next available function. The screen returns to delivery temperature after thirty (30) seconds of inactivity. Refer to your Sterling/Sterlco M2B Temperature Control Owner's Manual for a list of menus available using this key.

Digital Flow Screen

Optional

The optional digital flow screen displays process flow in gallons per minute (gpm). No customer-usable control is necessary. Depending on option level and setup, flows can be measured at rates reaching and exceeding 75 gallons per minute (284 lpm).

5-4 Identifying Control Panel Switches

This section lists the descriptions and functions of the control panel switches. These switches control the operation of the unit.

Figure 5
Control Panel Switches

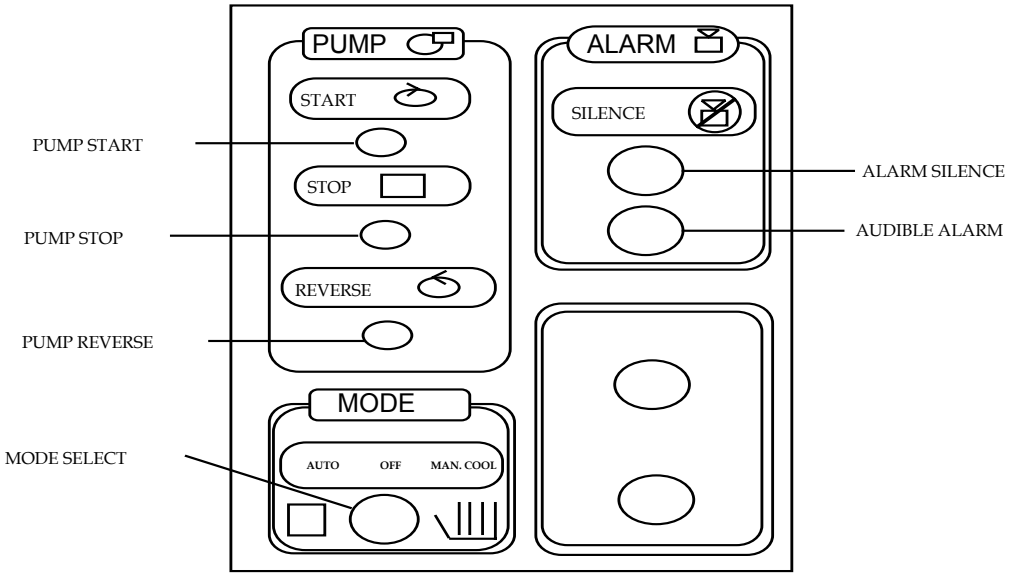

Pump Start

Press the **START** button to start the pump in the normal forward direction.

Pump Stop

Press the **STOP** button to stop the pump and de-energize the controller.

⚠ CAUTION

Always press the Pump Stop button and allow the pump to come to a complete stop before pressing the Pump Reverse button.

Failure to let the pump stop before reversing may damage the pump and drive.

Pump Reverse

Press the **REVERSE** button to start the pump in the reverse direction. Use this feature to purge oil from the mold.

Vent Cycle Start (optional)

Press the **VENT** button to start the vent cycle timer. Use this feature to purge air and water from the unit and process. This is used when the Autovent Cycle Option is added to the unit.

Mode Select

With the pump running, you can select the **AUTO** position or the **MAN. COOL** (manual cooling) position with the **Mode Select** switch. Select **AUTO** mode to energize the controller, permitting it to monitor and control the process. The switch automatically returns to the **OFF** position when in **AUTO** mode. The switch stays in the **MAN. COOL** position in **Manual Cooling** mode.

⚠ CAUTION

Always let the pump run for at least one (1) minute before switching to AUTO mode.

Never switch to AUTO mode when filling or venting the unit, except as described in the Unit Startup chapter. Improper switching can seriously damage the heater, as it could become energized with air in the system.

Alarm Silence

Press the **ALARM SILENCE** button to silence the audible alarm on the console.

⚠ CAUTION

After you silence the alarm, make sure you *locate and correct* the alarm condition before continuing with unit operation.

5-5 Identifying System Status Board Indicators

The system status board is located next to the controller panel. It displays indicator lights to show current operation status, letting you analyze system performance.

Figure 6
System Status Board Indicators

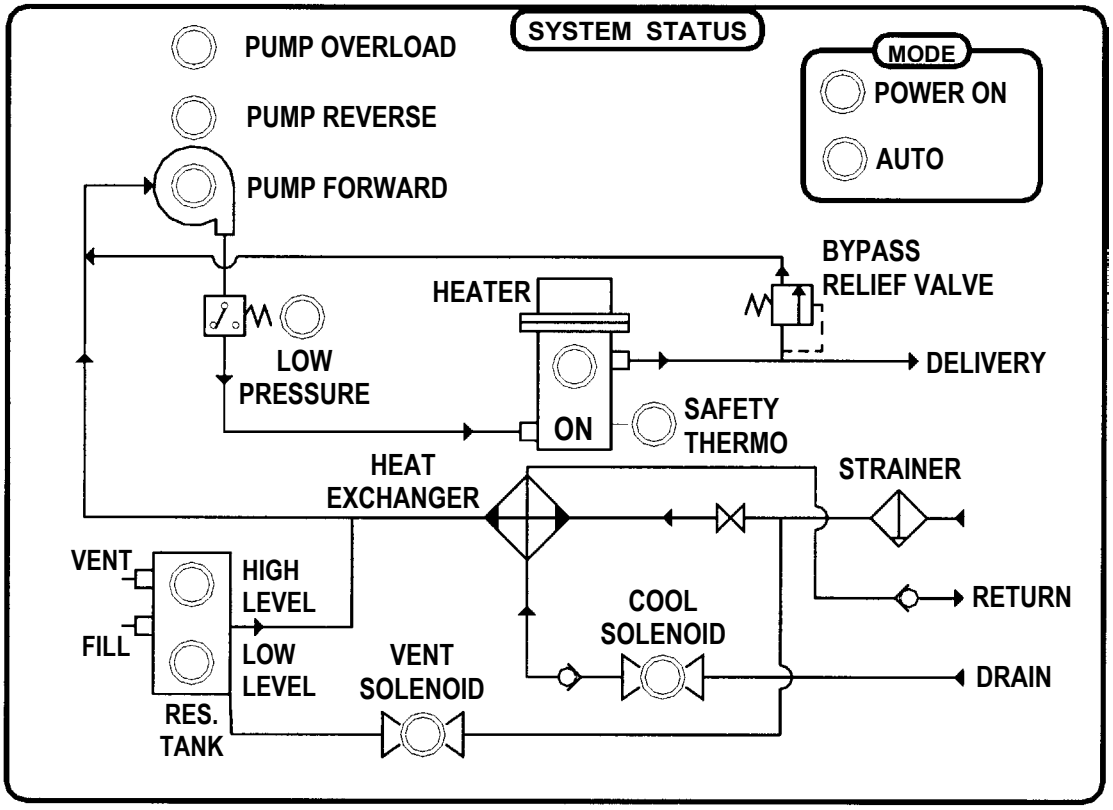

Use the status board to optimize unit performance. For example, if you observe a rapid cycling of the **Heater** and **Cool Solenoid** indicators, the unit is operating with a process inefficiency; see the Troubleshooting chapter for more information.

What follows is a description of system status board indicators.

Status Indicator Lights

Pump Reverse Indicator Light

The **Pump Reverse** indicator light illuminates when the unit pump runs in reverse.

Pump Forward Indicator Light

The **Pump Forward** indicator light illuminates when the unit pump runs in the normal forward direction. This indicator typically illuminates continuously during normal operation.

Heater On Indicator Light

The **Heater On** indicator illuminates when the heater energizes. This indicator illuminates intermittently when the controller energizes and de-energizes the heater as the heating cycle requires.

Cool Solenoid Indicator Light

The **Cool Solenoid** indicator illuminates when the cooling solenoid energizes. This indicator illuminates intermittently as the controller energizes the cooling solenoid; it is used only on the optional heat exchanger.

Vent Solenoid Indicator Light

If the Autovent option is present. The **Vent Solenoid** indicator illuminates when the venting solenoid energizes during venting sequences.

Mode Indicator Lights

Select the unit operating mode by using the **selection switch**.

Power On Mode Indicator Light

The **Power On** mode indicator light illuminates to indicate that the control circuit is energized in the unit.

Auto Mode Indicator Light

The **Auto** mode indicator light indicates that the Auto mode is active and the controller is monitoring the system and controlling the process.

If the **Auto** light is off and the **Cool Solenoid** indicator light is illuminated, the controller is disabled and the cooling solenoid is open, permitting maximum cooling.

If the **Auto** and **Cool Solenoid** indicator lights are off, the unit is in standby.

Fault Indicator Lights

Pump Overload Indicator Light

The **Pump Overload** indicator light illuminates when the pump is overloaded. ***This is an alarm condition***, so the audible alarm activates to notify you of the pump overload fault, and the unit shuts down.

Always correct the alarm condition before returning to normal operation!

Low Pressure Indicator Light

The **Low Pressure** indicator light illuminates when the unit has low heat transfer fluid pressure. ***This is an alarm condition***, so the audible alarm activates to notify you of the low pressure fault, and disables controller outputs, permitting the pump to continue to circulate fluid to avoid damage. If low pressure continues past five minutes elapsed time, the pump shuts off.

Always correct the alarm condition before returning to normal operation!

Safety Thermo Indicator Light

The **Safety Thermo** indicator light illuminates when the unit is overheating. ***This is an alarm condition***, so the audible alarm activates to notify you of the safety thermo fault, and disables controller outputs, permitting the pump to continue to circulate fluid to avoid damage.

Always correct this alarm condition before returning to normal operation!

High Level Indicator Light

The high fluid level alarm is an available option. The **High Level** indicator light illuminates when the heat transfer fluid level in the reservoir tank is **too high**. Carefully remove just enough fluid so this indicator light shuts off and an adequate volume is maintained in the reservoir.

Low Level Indicator Light

The low fluid level alarm is an available option .The **Low Level** indicator light illuminates when the heat transfer fluid level in the system is too low. ***This is an alarm condition***, so the audible alarm activates to notify you of the low fluid level fault, and the controller outputs are disabled.

Always correct the alarm condition before returning to normal operation!

- Notes -

⚠ WARNING

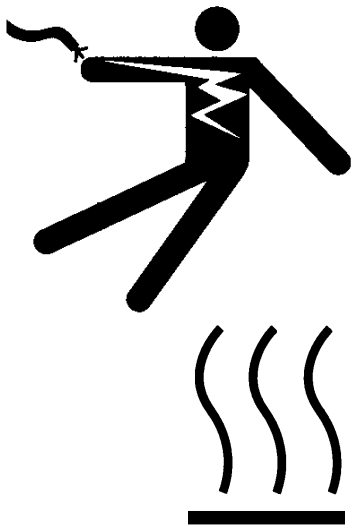

Make sure that your maintenance technicians comply with lock-out/tag-out procedures during any servicing or maintenance of this unit and related equipment, per OSHA article ART 1910.147.

***Before you begin servicing this unit*, disconnect all power to the unit, let the unit cool down *completely*, and turn off the water.**

Failure to follow these directives can result in serious injury or *death!*

6-1 Periodic Checks

Making Daily Checks

- Check fluid level; *add fluid as needed*.
- Check all connecting lines, hoses, and connectors for wear or damage.

Making Monthly Checks

- Check for leaks developing at the pump seal, gaskets, and other similar locations.
- Check the pump drive V belt for any wear.
- Check the reservoir tank vent for any obstructions.

Making Quarterly Checks

- Check the heat transfer fluid for deterioration. If the fluid is noticeably darker, or it seems significantly thicker, drain the system and replace the fluid with fresh, new recommended heat transfer fluid.

  Do a routine check of the fluid every 1,000 hours of operation or every three (3) months, whichever comes first. Contact Sterling, Inc. Service for information on fluid testing.

Making Six-Month Checks

- Inspect electrical connections for secure, tight attachment points and ground connections. Inspect the power cable, especially at the entrance point to the electrical enclosure. Have a qualified electrician perform this inspection.
- Check the mounting bolts on the pump, the motor, and the heater flange for tightness.
- Remove the heat exchanger tube bundle and check it for lime and mineral deposits. Carefully clean the bundle as needed.

6-2 Routine Servicing

Your hot oil temperature control unit requires little in preventive maintenance and servicing. To keep it in good, reliable working order, make sure you follow the following scheduled preventive maintenance procedures.

Keep surfaces clean and free of any excessive accumulations of dirt, oil, or debris. This is especially true for the pump. It relies on free air circulation for proper cooling.

Check the motor air intake screen for any accumulation of dirt; clean it as needed.

Servicing the Unit Monthly or Every 500 Hours

- **Lubricate the pump** at the grease fittings with a high-quality polyurea grease rated at 320ºF or higher. Recommended: Chevron Black Pearl; *do not over-lubricate*.
- **Adjust** the pump drive **belt tension**. Use the belt tensioning specifications listed in this chapter on ***Page 51***. Make sure that the motor pulley is properly aligned with the pump pulley; use a straightedge to check. Tighten motor mounting bolts after realignment.
- Inspect the screen in the Y strainer for accumulations of debris. Clean as needed.

Servicing the Unit Every Three Months

Remove and clean the screen in the Y-strainer. Replace the screen if it is damaged.

Motor Lubrication Procedure

Be sure that the grease you are adding to the motor is compatible with the grease already in the motor. Consult your Baldor distributor or an authorized service center if a grease other than the recommended type is to be used.

A high grade ball or roller bearing grease should be used. Recommended grease for standard service conditions is Polyrex EM (Exxon Mobil).
Equivalent and compatible greases include:
Texaco Polystar, Rykon Premium #2, Pennzoil Pen 2 Lube and Chevron SRI.

1800 RPM	Lubrication Intervals in Hours			Grease to be added		
motor size	up to 250°F	251°F - 400°F	over 400°F	ounces	grams	cu. In.
5 HP and Under	12,000	6,000	1,200	0.30	8.4	0.6
7-1/2 to 20 HP	10,000	5,000	1,000	0.61	17.0	1.2
25 - 40 HP	8,000	4,000	750	0.81	23.0	1.5

Caution: To avoid damage to motor bearings, grease must be kept free of dirt. For an extremely dirty environment, contact your Baldor distributor or an authorized Baldor Service Center for additional information.

With Grease Outlet Plug

1. Clean all grease fittings.
2. Remove grease outlet plug.
3. If motor is stopped, add the recommended amount of grease. If motor is to be greased while running, a slightly greater quantity of grease will have to be added. Add grease slowly until new grease appears at shaft hole in the endplate or purge outlet plug.
4. Re-install grease outlet plug.

Without Grease Outlet Plug

1. Disassemble motor.
2. Add recommended amount of grease to bearing and bearing cavity. (Bearing should be about 1/3 full of grease and outboard bearing cavity should be about 1/2 full of grease.)

Note: Bearing is 1/3 full when only one side of bearing is completely full of grease.

3. Assemble motor.

6-3 Draining the Unit for Storage

You should thoroughly flush and drain the 6017 unit if you need to take it out of service for a long time, or if you expect it to become exposed to freezing temperatures. Sterling, Inc. recommends SterlFlush™ flushing fluid or equivalent for flushing your 6017 unit; follow unit flushing instructions that comes with SterlFlush™ flushing fluid.

Drain plugs are provided at the base of the heater tank, reservoir tank, and on the pump. You should also remove, drain, and reinstall the heat exchanger tube bundle before storage.

6-4 Corrective Maintenance

Pumps and Seals

Each 6017 unit is completely tested and calibrated before leaving the factory. The unit is then cooled, drained, and packed for shipment.

If the unit stands idle for a long time before being installed in your factory, gaskets can dry out and possibly leak when you start the unit. In most cases, these gaskets soon swell and form a tight seal. If not, **you may need to tighten the bolts to stop the leak.**

Similarly, rough handling in shipping may sometimes cause minor leaks upon startup; **you may need to re-tighten bolts or fittings to stop the leak.**

You should expect to periodically adjust the packing or replace the pump seal. If the pump is properly lubricated and used at moderate temperatures, the seal should last several years. The following section describes the proper procedures for replacing the seal Periodic replacement of the pump drive V-belt is also to be expected.

Note: If the pump motor wiring is disconnected for removal from the unit, **you must check the actual direction of rotation** when the motor is rewired to the unit.

How to increase Belt Life

Keep sheaves and belts clean.
Abrasive dust, rust, oil and acids reduce service life.

Give drives elbow room.
Never let belts run against belt guards or other obstructions.

Use large diameter sheaves and fewer belts.
You save money and increase drive life.

Never force belts.
Move motor on adjustable base so belts can go on easily.

Eliminate slack.
Adjust motor and tighten belts in position. Slack belts wear excessively, cause slippage and deliver less power.

Use matched belts.
Matched belts run smoother and last longer because the load is evenly distributed. Never replace just part of a set of belts.

Avoid belt idlers.
Belt idlers decrease belt life! Always maintain proper tension through motor adjustment.

Mount belts straight.
Shafts must be parallel and sheave grooves in alignment to prevent unnecessary belt wear.

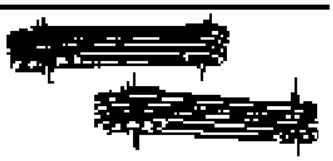

Don't overload.
An overloaded belt drive is like a one-ton truck with a two-ton load — both are sure to break down. Always use ample capacity.

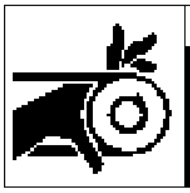

⚠WARNING

Operating drives without guards in place can result in severe injury or death.

© Emerson Power Transmission Manufacturing, L.P. 1998, 1999.
All Rights Reserved.

Browning®

BELT TENSIONING INSTRUCTIONS

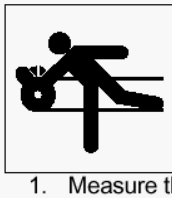

⚠WARNING

Disconnect power before installation and maintenance. Failure to do so can result in severe injury or death.

1. Measure the belt span.
2. Calculate deflection
3. See tables below for correct deflection force.
4. Apply force at right angles to the center of the span (see diagram below). The BROWNING® belt tension checker, shown at left, is ideal for this procedure.
5. Check the tension at least twice during the first day of operation, and periodically thereafter.

Be sure — use the inexpensive BROWNING® Belt Tension Checker See Form 5453 for more detail.

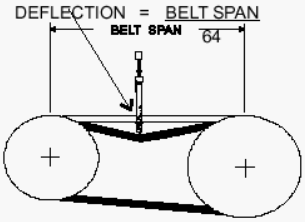

The capacity of the BROWNING® belt tension checker is 35 lbs. Other means of applying force must be used if force requirement is greater than this.

SHEAVE DIAM - INCHES
DEFLECTION FORCE - LBS.

Belt Cross Section	Smallest Sheave Diameter Range	RPM Range	Belt Deflection Force: Super Gripbelts and Unnotched Gripbands		Belt Deflection Force: Gripnotch Belts and Notched Gripbands	
			Used Belt	New Belt	Used Belt	New Belt
A,AX	3.0 - 3.6	1000-2500 2501-4000	3.7 2.8	5.5 4.2	4.1 3.4	6.1 5.0
	3.8 - 4.8	1000-2500 2501-4000	4.5 3.8	6.8 5.7	5.0 4.3	7.4 6.4
	5.0 - 7.0	1000-2500 2501-4000	5.4 4.7	8.0 7.0	5.7 5.1	8.4 7.6
B,BX	3.4 - 4.2	860-2500 2501-4000	- -	- -	4.9 4.2	7.2 6.2
	4.4 - 5.6	860-2500 2501-4000	5.3 4.5	7.9 6.7	7.1 6.1	10.5 9.1
	5.8 - 8.6	860-2500 2501-4000	6.3 6.0	9.4 8.9	8.5 7.3	12.6 10.9
C,CX	7.0 - 9.0	500-1740 1741-3000	11.5 9.4	17.0 13.8	14.7 11.9	21.8 17.5
	9.5 - 16.0	500-1740 1741-3000	14.1 12.5	21.0 18.5	15.9 14.6	23.5 21.6
D	12.0 - 16.0	200-850 851-1500	24.9 21.2	37.0 31.3	- -	- -
	18.0 - 20.0	200-850 851-1500	30.4 25.6	45.2 38.0	- -	- -
3V,3VX	2.2 - 2.4	1000-2500 2501-4000	- -	- -	3.3 2.9	4.9 4.3
	2.65 - 3.65	1000-2500 2501-4000	3.6 3.0	5.1 4.4	4.2 3.8	6.2 5.6
	4.12 - 6.90	1000-2500 2501-4000	4.9 4.4	7.3 6.6	5.3 4.9	7.9 7.3
5V,5VX	4.4 - 6.7	500-1749 1750-3000 3001-4000	- - -	- - -	10.2 8.8 5.6	15.2 13.2 8.5
	7.1 - 10.9	500-1740 1741-3000	12.7 11.2	18.9 16.7	14.8 13.7	22.1 20.1
	11.8 - 16.0	500-1740 1741-3000	15.5 14.6	23.4 21.8	17.1 16.8	25.5 25.0
8V	12.5 - 17.0	200-850 851-1500	33.0 26.8	49.3 39.9	- -	- -
	18.0 - 22.4	200-850 851-1500	39.6 35.3	59.2 52.7	- -	- -

Condition	Possible cause	Solution
Temperature fluctuations/rapid cycling from hot to cold.	Undersized connectors/lines.	Increase size of connectors/ water lines.
	Long connecting lines between unit and mold.	Move the unit closer to the mold and shorten connecting lines.
	Serpentine flow through mold.	Connect lines for parallel flow instead of series flow.
	Blocked line in mold.	Check mold for metal chips or deposits. Clean mold.
	Quick disconnect fitting with check valve.	Remove and replace fitting or valve.
	Carbon build-up in unit piping or fittings.	Clean or replace affected piping. Replace fluid.
	Faulty Sterlco TCU.	Check unit by opening the manual bypass to determine if the TCU contols the set point temperature.
	Reversed probes.	Switch Return and Delivery probes.
Unit does not heat properly/can not achieve set point.	Loss of fluid in process.	Check all lines/connections/ fittings.
	Vent valve open.	Allow vent timer to run out; **or**, check valve operation when unit is cold by opening the fill port.
	Faulty/dirty solenoid valve; usually detected when there is a steady stream or trickle of water out of the drain line.	Switch to Manual Cool mode several times to flush valve. If the leak continues, disconnect the power to the unit, turn off the water supply, and clean or replace the solenoid.
	Degraded fluid.	Drain and replace fluid.
Unit does not heat.	Defective heater contactor.	Visual inspection of coil and contacts. Repair/replace defective contactors.
	Defective immersion heater.	Check resistance on all three (3) legs of heater with an ohmmeter. If not all equal, contact factory for replacement heater.
	Heater burnout.	Check heater tank for scorched/ discolored paint. Check resistance on all three (3) legs of heater with an ohmmeter. Replace heater as needed.

Condition	Possible cause	Solution
Unit does not heat. (cont'd.)	Controller heater output open.	Check the heater output with an ohmmeter to ground. It should read in the mega-ohm range. Infinite or zero readings indicate a defective output.
	Clogged Y strainer.	Clean Y strainer.
Unit overheats/unable to cool.	Water supply to unit is turned **OFF**.	Open water supply.
	Water drain is plugged or excessive back pressure in drain line.	Clear drain line or eliminate back pressure condition.
	Heat exchanger tubes plugged by lime deposits.	Remove tube bundles; clean/ replace as required.
	Faulty solenoid valve.	Test solenoid valve by switching to Manual Cool mode and listen for valve operation. Replace if faulty.
Rapid drop in pressure/no pressure.	Leaks in connecting lines.	Inspect/replace faulty line or connection.
	Air in circulating lines.	Perform venting sequence in Chapter 3.
	Low fluid.	Check fluid level in sight glass. Add fluid if required.
	Defective Ful-Flo valve.	See Chapter 3.
	Water in fluid.	Drain water from low point in piping (see Chapter 3), or boil water off.
	Vent solenoid open.	Allow vent timer to run out; **or**, check valve operation when unit is cold by opening the fill port.
	Pump running in reverse.	Check motor; rewire if necessary. See electrical diagrams.
	Pump repair/adjustment needed.	Adjust head spacing or replace worn pump components.
	V belt broken/worn.	Replace as required.
Noisy pump.	Water in fluid.	Drain water from low point in piping (see Chapter 3), or boil water off.
	Severely degraded fluid.	Drain and flush system. Replace fluid.

Service Notes

Service Notes

Service Notes

Parts Department

Call toll-free 7am–6pm CST [800] 783-7835 or call [414] 354-0970

The Sterling/Sterlco Parts Department at Sterling, Inc. is ready to provide the parts to keep your systems up and running. Sterling/Sterlco replacement parts ensure operation at design specifications. Please have the model and serial number of your equipment when you call. Consult the Customer Parts List included in your information packet for replacement part numbers.

Service Department

Call toll-free 8am–5pm CST [800] 783-7835 or call [414] 354-0970

Sterling/Sterlco has a qualified service department ready to help. Service contracts are available for most Sterling/ Sterlco products.

Sales Department

Call [414] 354-0970 Monday–Friday, 8am–5pm CST

Sterling/Sterlco products are sold by a network of independent sales representatives. Contact our Sales Department for the name of the sales representative nearest you.

Sterling, Inc.

Sterling/Sterlco
5200 West Clinton Avenue
Milwaukee, WI 53224-9518
[414] 354-0970 • Fax [414] 354-6421

TECHNICAL SERVICE MANUAL

HEAVY-DUTY BRACKET MOUNTED PUMPS
SERIES 125 and 4125
SIZES LS, Q, QS, M

CONTENTS

Introduction	1
Special Information	**2**
Maintenance	**2**
Packed Pumps	**3**
Mechanical Seal Pumps	
Standard Rubber Bellows Type	**6**
Optional Teflon Seal	**9**
Thrust Bearing Adjustment	**10**
Installation of Carbon Graphite Bushings	**11**
Pressure Relief Valve Instructions	**11**

INTRODUCTION

The illustrations used in this manual are for identification purposes only and cannot be used for ordering parts. Obtain a parts list from the factory or a Viking® representative. Always give complete name of part, part number and material with model number and serial number of pump when ordering repair parts. The unmounted pump or pump unit model number and serial number are on the nameplate.

In the Viking model number system, basic size letters are combined with series number (125 and 4125) indicating both unmounted or mounted pump unit.

UNMOUNTED PUMP		UNITS
PACKED	MECH. SEAL	
LS125 Q125 QS125 M125	LS4125 Q4125 QS4125 M4125	Units are designated by the un-mounted pump model numbers followed by a letter indicating drive style. **V** = V-belt **D** = Direct Connected **R** = Viking Speed Reducer **P** = Commercial Speed Reducer

This manual deals only with Series 125 and 4125 Heavy-Duty Bracket Mounted Pumps. **Refer to Figures 1 through 15** for general configuration and nomenclature used in this manual. Pump specifications and recommendations are listed in Catalogue Section 141, Series 125 and 4125 Heavy Duty Bracket Mounted Pumps.

FIGURE 1
Sizes LS

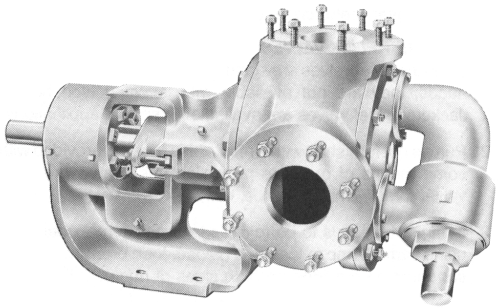

FIGURE 2
Sizes Q and M

FIGURE 3
Sizes QS

SPECIAL INFORMATION

DANGER

BEFORE OPENING ANY VIKING PUMP LIQUID CHAMBER (PUMPING CHAMBER, RESERVOIR, RELIEF VALVE ADJUSTING CAP FITTING ETC.) BE SURE:

1. THAT ANY PRESSURE IN CHAMBER HAS BEEN COMPLETELY VENTED THROUGH SUCTION OR DISCHARGE LINES OR OTHER APPROPRIATE OPENINGS OR CONNECTIONS.
2. THAT THE DRIVING MEANS (MOTOR, TURBINE, ENGINE, ETC.) HAS BEEN "LOCKED OUT" OR MADE NON-OPERATIONAL SO THAT IT CANNOT BE STARTED WHILE WORK IS BEING DONE ON PUMP.
3. THAT YOU KNOW WHAT LIQUID THE PUMP HAS BEEN HANDLING AND THE PRECAUTIONS NECESSARY TO SAFELY HANDLE THE LIQUID. OBTAIN A MATERIAL SAFETY DATA SHEET (MSDS) FOR THE LIQUID TO BE SURE THESE PRECAUTIONS ARE UNDERSTOOD.

FAILURE TO FOLLOW ABOVE LISTED PRECAUTIONARY MEASURES MAY RESULT IN SERIOUS INJURY OR DEATH.

ROTATION: Viking pumps operate equally well in a clockwise or counterclockwise rotation. Shaft rotation determines which port is suction and which is discharge. Port in area where pumping elements (gear teeth) come out of mesh is suction port.

PRESSURE RELIEF VALVES:

1. Viking pumps are positive displacement pumps and must be provided with some sort of pressure protection. This may be a relief valve mounted directly on the pump, an inline pressure relief valve, a torque limiting device or a rupture disk.
2. There are relief valve options available on those pump models designed to accept a relief valve. Options may include a return to tank relief valve and a jacketed relief valve. Pumps equipped with a jacketed head plate are generally not available with a relief valve.
3. If pump rotation is reversed during operation, pressure protection must be provided on ***both*** sides of pump.
4. Relief valve adjusting screw cap must ***always*** point towards suction side of pump. If pump rotation is reversed, remove pressure relief valve and turn end for end. **Refer to Figures 1 and 2.**
5. Pressure relief valves cannot be used to control pump flow or regulate discharge pressure.

For additional information on pressure relief valves, **Refer to Technical Service Manual TSM000 and Engineering Service Bulletin ESB-31.**

SPECIAL MECHANICAL SEALS

Extra care must be taken in repair of pumps with mechanical seals. Read and follow all special information supplied with pump.

MAINTENANCE

Series 125 and 4125 pumps are designed for long, trouble-free service life under a wide variety of application conditions with a minimum of maintenance. The points listed below will help provide long service life.

LUBRICATION: External lubrication must be applied slowly with a hand gun to all lubrication fittings every 500 hours of operation with multi-purpose grease, NLGI #2. Do not over-grease. Applications involving very high or low temperatures will require other types of lubrication. **Refer to Engineering Service Bulletin ESB-515.** Consult factory with specific lubrication questions.

PACKING ADJUSTMENT: New packed pumps require initial packing adjustment to control leakage as packing 'runs in". Make initial adjustments carefully and do not over-tighten packing gland. After initial adjustment, inspection will reveal need for packing gland adjustment or packing replacement. **Refer to instructions under Disassembly, page 4, and Assembly, page 5,** regarding repacking pump.

CLEANING PUMP: Keep pump as clean as possible. This will facilitate inspection, adjustment and repair work and help prevent overlooking a dirt covered grease fitting.

STORAGE: If pump is to be stored, or not used for six months or more, pump must be drained and a light coat of non-detergent SAE 30 weight oil must be applied to all internal pump parts. Lubricate fittings and apply grease to pump shaft extension. Viking suggests rotating pump shaft by hand one complete revolution every 30 days to circulate the oil.

SUGGESTED REPAIR TOOLS: The following tools must be available to properly repair Series 125 and 4125 pumps. These tools are in addition to standard mechanics' tools such as open end wrenches, pliers, screw drivers, etc. Most of the items can be obtained from an industrial supply house.

1. Soft Headed hammer
2. Allen wrenches (some mechanical seals and set collars)
3. Packing hooks, flexible (packed pumps)
   Large for 0.38 inch and up cross section packing
4. Mechanical seal installation sleeve
   Viking Part No. 2-751-005-630 for 2.44 inch
   Q, QS & M4125
5. Bearing locknut spanner wrench
   (Source: #472 J. H. Williams & Co. or equal)
6. Spanner wrench, adjustable pin type for use on double end caps
   (Source: #482 J. H. Williams & Co. or equal)
7. Brass bar
8. Arbor press

PACKED PUMPS

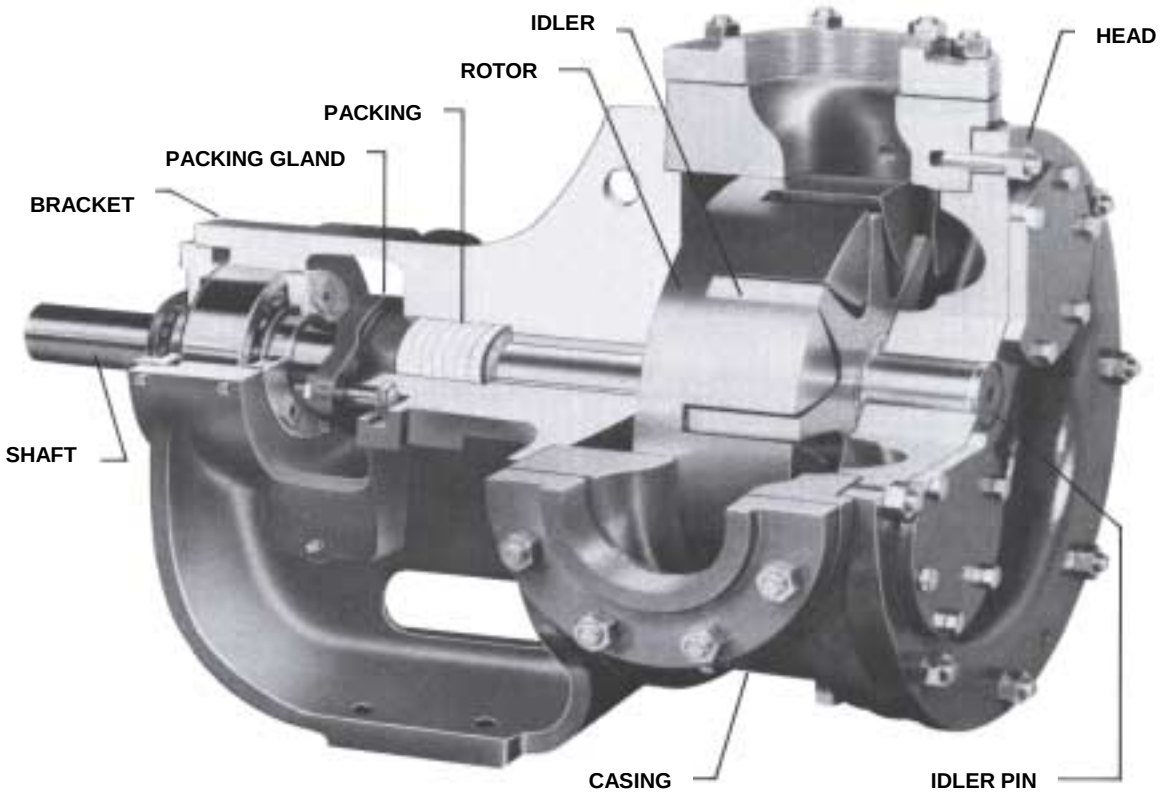

FIGURE 4
CUTAWAY OF PACKED PUMP MODEL Q OR M125

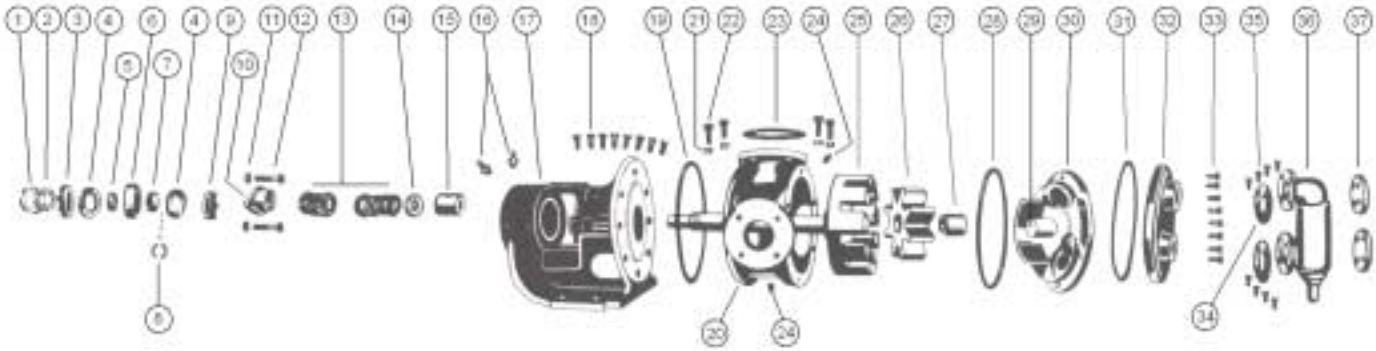

EXPLODED VIEW OF MODEL LS 125

ITEM	NAME OF PART	ITEM	NAME OF PART	ITEM	NAME OF PART
1	Locknut	14	Packing Retainer Washer	27	Idler Bushing
2	Lockwasher	15	Bracket Bushing	28	Head Gasket
3	End Cap (Outer)	16	Grease Fitting	29	Idler Pin
4	Lip Seal for End Cap	17	Bracket and Bushing	30	Head and Idler Pin
5	Bearing Spacer Collar (Outer)	18	Capscrew for Bracket	31	Gasket for Jacket Head Plate
6	Ball Bearing	19	Bracket Gasket	32	Jacket Head Plate
7	Bearing Spacer Collar (Inner)	20	Casing	33	Capscrew for Head
8	Ring, Half Round	21	Nut for Flanges	34	Relief Valve Gasket
9	End Cap (Inner)	22	Capscrew for Flanges	35	Capscrew for Relief Valve
10	Packing Gland	23	Pipe Flange Gasket	36	Internal Relief Valve
11	Packing Gland Nut	24	Pipe Plug	37	Cover Plate, Relief Valve
12	Packing Gland Capscrew	25	Rotor and Shaft		
13	Packing	26	Idler and Bushing		

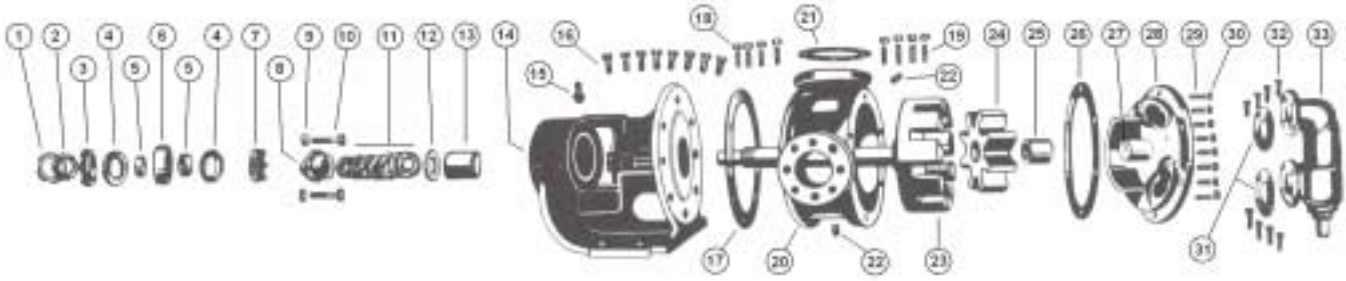

EXPLODED VIEW Q, QS, AND M125

ITEM	NAME OF PART	ITEM	NAME OF PART	ITEM	NAME OF PART
1	Locknut	**13**	Bracket Bushing	**25**	Idler Bushing
2	Lockwasher	**14**	Bracket and Bushing	**26**	Head Gasket
3	End Cap (Outer)	**15**	Grease Fitting	**27**	Idler Pin
4	Lip Seal for End Cap	**16**	Capscrew for Bracket	**28**	Head and Idler Pin
5	Bearing Spacer Collar	**17**	Bracket Gasket	**29**	Stud for Head
6	Ball Bearing	**18**	Nut for Flanges	**30**	Nut for Head
7	End Cap (Inner)	**19**	Stud for Flanges	**31**	Relief Valve Gasket
8	Packing Gland	**20**	Casing (QS size has opposite ports)	**32**	Capscrew for Relief Valve
9	Packing Gland Nut	**21**	Pipe Flange Gasket	**33**	Internal Relief Valve
10	Packing Gland Capscrew	**22**	Pipe Plug		Suckback Line, Not Illus
11	Packing	**23**	Rotor and Shaft		
12	Packing Retainer Washer	**24**	Idler and Bushing		

DISASSEMBLY

DANGER

BEFORE OPENING ANY VIKING PUMP LIQUID CHAMBER (PUMPING CHAMBER, RESERVOIR, RELIEF VALVE ADJUSTING CAP FITTING ETC.) BE SURE:

1. THAT ANY PRESSURE IN CHAMBER HAS BEEN COMPLETELY VENTED THROUGH SUCTION OR DISCHARGE LINES OR OTHER APPROPRIATE OPENINGS OR CONNECTIONS.
2. THAT THE DRIVING MEANS (MOTOR, TURBINE, ENGINE, ETC.) HAS BEEN "LOCKED OUT" OR MADE NON-OPERATIONAL SO THAT IT CANNOT BE STARTED WHILE WORK IS BEING DONE ON PUMP.
3. THAT YOU KNOW WHAT LIQUID THE PUMP HAS BEEN HANDLING AND THE PRECAUTIONS NECESSARY TO SAFELY HANDLE THE LIQUID. OBTAIN A MATERIAL SAFETY DATA SHEET (MSDS) FOR THE LIQUID TO BE SURE THESE PRECAUTIONS ARE UNDERSTOOD.

FAILURE TO FOLLOW ABOVE LISTED PRECAUTIONARY MEASURES MAY RESULT IN SERIOUS INJURY OR DEATH.

1. Mark head and casing before disassembly to insure proper reassembly. The idler pin, which is offset in pump head, must be positioned toward and equal distance between port connections to allow for proper flow of liquid through pump.

   Remove head from pump. ***Do not allow idler to fall from idler pin.*** Tilt top of head back when removing to prevent this. Avoid damaging head gasket. If pump is furnished with pressure relief valve, it need not be removed from head or disassembled at this point. **Refer to Pressure Relief Valve Instructions,** page 11.

   If LS pump has jacketed head plate, it will separate from head when it is removed. The gasket between head and jacket head plate must be totally removed. Use new gasket when assembling pump.
2. Remove idler and bushing assembly.
3. Insert length of hardwood or brass through port opening between rotor teeth to keep shaft from turning. Bend up tang of lockwasher and with a spanner wrench remove locknut and lockwasher from shaft.
4. Remove packing gland nuts.
5. Tap shaft forward approximately 0.5 inch and remove pair of half round rings under inner bearing spacer collar.
6. Carefully remove rotor and shaft to avoid damaging bracket bushing.
7. Remove packing gland from side of bracket.
8. Loosen four setscrews over the inner and outer end caps. Remove both end caps with lip seals, spacer collars and ball bearing. **Refer to Figure 5.**

   The inner cap can be removed through the side opening of the bracket.

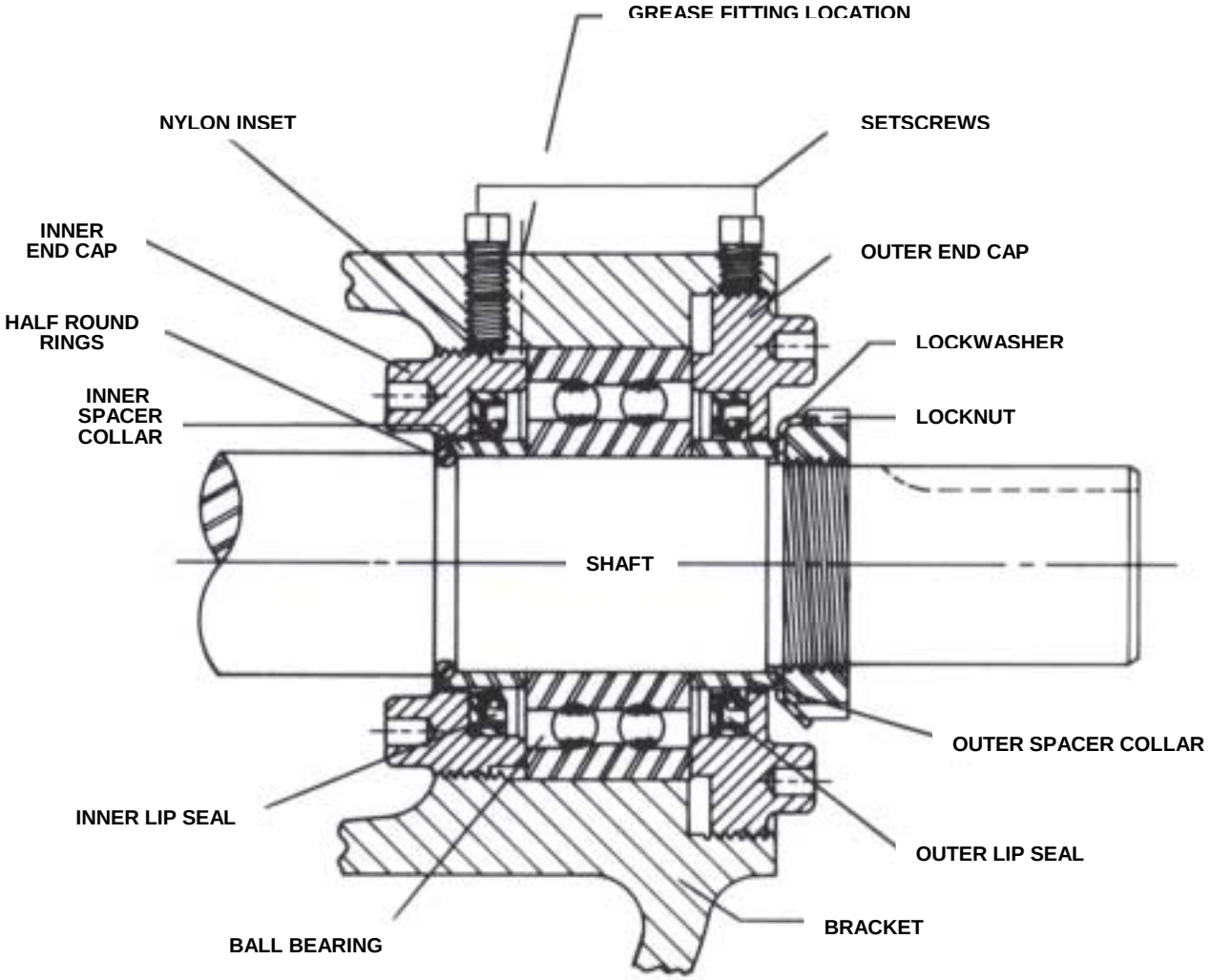

FIGURE 5

9. Remove packing and packing retainer washer.

10. Clean all parts thoroughly and examine for wear and damage. Check lip seals, ball bearing, bushings and idler pin and replace if necessary. Check all other parts for nicks, burrs, excessive wear and replace if necessary.

Wash bearings in clean solvent. Blow out bearings with compressed air. Do not allow bearings to spin; turn them slowly by hand. Spinning bearings will damage race and balls. Make sure bearings are clean, then lubricate with non-detergent SAE 30 weight oil and check for roughness. Roughness can be determined by turning outer race by hand.

If bearings have roughness, bearings will need to be replaced.

11. Casing can be checked for wear or damage while mounted on bracket.

ASSEMBLY

1. Install bracket bushing. If bracket bushing has a lubrication groove, install bushing with groove at 6:00 o'clock position in bracket. If carbon graphite, **Refer to Installation of Carbon Graphite Bushings,** page 11.

2. Coat shaft of rotor shaft assembly with non-detergent SAE 30 weight oil. Start end of shaft in bracket bushing turning from right to left, slowly pushing rotor in casing.

3. Place packing retainer washer in bottom of packing chamber and pack pump with new packing. Use packing suitable for liquid being pumped. Install packing, staggering the joints from one side of shaft to other. Lubricate packing rings with oil, grease or graphite to aid assembly. A length of pipe will help to seat each packing ring.

4. Install packing gland, capscrews and nuts. Back rotor and shaft out of casing just far enough to insert packing gland through side opening of bracket over end of shaft. Make sure gland is installed square and nuts are tightened evenly. Tighten nuts wrench tight then back off until gland is slightly loose.

5. Coat idler pin with non-detergent SAE 30 weight oil and place idler and bushing on idler pin in head. If replacing with carbon graphite bushing, **Refer to Installation of Carbon Graphite Bushings,** page 11.

6. Using a .010 to .015 inch head gasket, install head and idler assembly on pump. Pump head and casing were marked before disassembly to insure proper reassembly. If not, be sure idler pin, which is offset in pump head, is positioned toward and equal distance between port connections to allow for proper flow of liquid through pump.

If pump is equipped with jacketed head plate, install at this time along with new gasket.

Tighten head capscrews evenly.

If pump was equipped with a relief valve and it was removed during disassembly, install on head with new gaskets. Relief valve adjusting screw cap must always point toward suction port. **Refer to Figures 1,2 and 3** on page 1. For relief valve repair or adjustments, **Refer to Pressure Relief Valve Instructions**, page 11.

7. Slide inner spacer collar over shaft with recessed end facing rotor. Q, QS and M size bearing spacer collars are not recessed.

Place pair of half round rings on shaft and slide inner bearing spacer collar over half round rings to lock them in place. There is no pair of half round rings on Q, QS and M size pumps. **Refer to Figure 5,** page 5.

8. Press lip seal, lip facing end of shaft, in inner end cap and insert end cap through shaft end of bracket. Turn end cap clockwise, looking at shaft end, until it engages threads. End cap spanner wrench holes must be facing rotor. Turn end cap with spanner wrench until it projects slightly from opening on side of bracket. End cap must not be turned so far that lip seal drops off end of spacer collar on shaft or end cap becomes disengaged from threads. **Refer to Figure 5,** page 5.

If this happens, remove inner spacer collar, half round rings and end cap and start over at Step 7.

9. Pack ball bearing with multi-purpose grease, NLGI #2. Place on shaft and push or gently drive in place in bracket.

10. Press lip seal, lip facing end of shaft, in outer end cap and insert end cap in bracket. Turn end cap in bracket until it is tight against bearing. **Refer to Figure 5,** page 5.

11. Put lockwasher and locknut on shaft. Insert length of hardwood or brass through port opening between rotor teeth to keep shaft from turning. Tighten locknut to 120-150 ft.– lbs. Torque (LS) or 170-190 ft. – lbs. Torque (Q, QS, M). Bend one tang of lockwasher into slot of locknut. If tang does not line up with slot, tighten locknut until it does. Failure to tighten locknut or engage lockwasher tang could result in early bearing failure and cause damage to rest of pump.

Remove length of hardwood or brass from port opening.

12. Adjust pump end clearance. **Refer to Thrust Bearing Adjustment,** page 10.

13. Lubricate all grease fittings with multi-purpose grease, NLGI #2.

DANGER

BEFORE STARTING PUMP, BE SURE ALL DRIVE EQUIPMENT GUARDS ARE IN PLACE.

FAILURE TO PROPERLY MOUNT GUARDS MAY RESULT IN SERIOUS INJURY OR DEATH.

MECHANICAL SEAL PUMPS

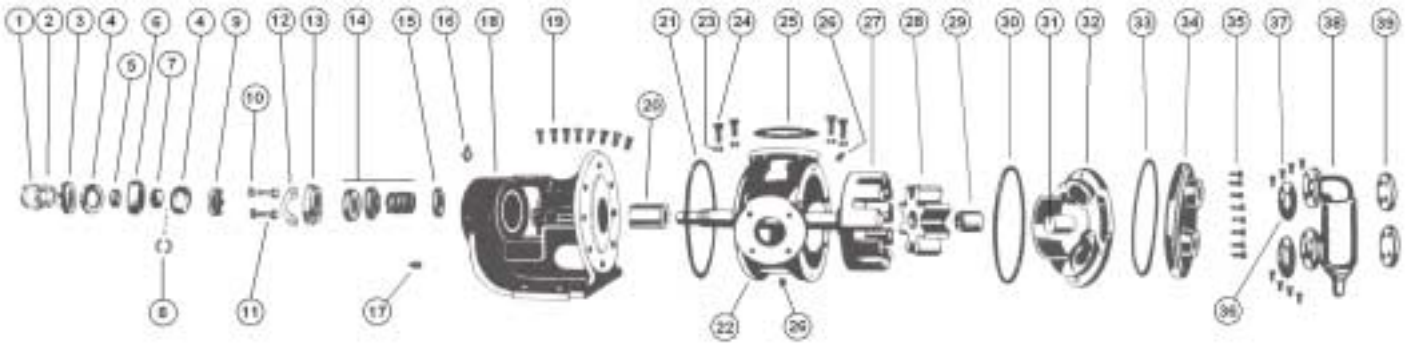

EXPLODED VIEW FOR MODEL LS4125

ITEM	NAME OF PART	ITEM	NAME OF PART	ITEM	NAME OF PART
1	Locknut	14	Mechanical Seal	27	Rotor and Shaft
2	Lockwasher	15	Set Collar	28	Idler and Bushing
3	End Cap (Outer)	16	Grease Fitting	29	Idler Bushing
4	Lip Seal for End Cap	17	Pipe Plug	30	Head Gasket
5	Bearing Spacer Collar (Outer)	18	Bracket and Bushing	31	Idler Pin
6	Ball Bearing	19	Capscrew for Bracket	32	Head and Idler Pin
7	Bearing Spacer Collar (Inner)	20	Bracket Bushing	33	Gasket for Jacket Head Plate
8	Ring, Half Round	21	Bracket Gasket	34	Jacket Head Plate
9	End Cap (Inner)	22	Casing	35	Capscrew for Head
10	Nut for Seal Holder	23	Nut for Flanges	36	Relief Valve Gasket
11	Capscrew for Seal Plate	24	Capscrew for Flanges	37	Capscrew for Relief Valve
12	Seal Plate	25	Pipe Flange Gasket	38	Internal Relief Valve
13	Seal Holder	26	Pipe Plug	39	Cover Plate, Relief Valve

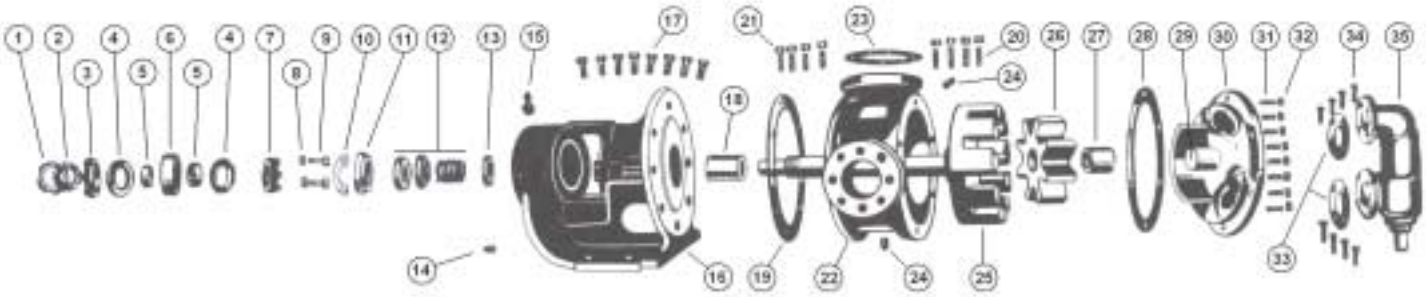

EXPLODED VIEW FOR MODEL Q, QS AND M4125

ITEM	NAME OF PART	ITEM	NAME OF PART	ITEM	NAME OF PART
1	Locknut	**13**	Set Collar	**25**	Rotor and Shaft
2	Lockwasher	**14**	Pipe Plug	**26**	Idler and Bushing
3	End Cap (Outer)	**15**	Grease Fitting	**27**	Idler Bushing
4	Lip Seal for End Cap	**16**	Bracket and Bushing	**28**	Head Gasket
5	Bearing Spacer Collar	**17**	Capscrew for Bracket	**29**	Idler Pin
6	Ball Bearing	**18**	Bracket Bushing	**30**	Head and Idler Pin
7	End Cap (Inner)	**19**	Bracket Gasket	**31**	Stud for Head
8	Nut for Seal Holder	**20**	Stud for Flanges	**32**	Nut for Head
9	Capscrew for Seal Holder	**21**	Nut for Flanges	**33**	Relief Valve Gasket
10	Seal Holder Plate	**22**	Casing (QS size has opposite ports)	**34**	Capscrew for Relief Valve
11	Seal Holder	**23**	Pipe Flange Gasket	**35**	Internal Relief Valve
12	Mechanical Seal	**24**	Pipe Plug		Suckback Line, Not Illus.

DISASSEMBLY

DANGER

BEFORE OPENING ANY VIKING PUMP LIQUID CHAMBER (PUMPING CHAMBER, RESERVOIR, RELIEF VALVE ADJUSTING CAP FITTING ETC.) BE SURE:

1. THAT ANY PRESSURE IN CHAMBER HAS BEEN COMPLETELY VENTED THROUGH SUCTION OR DISCHARGE LINES OR OTHER APPROPRIATE OPENINGS OR CONNECTIONS.
2. THAT THE DRIVING MEANS (MOTOR, TURBINE, ENGINE, ETC.) HAS BEEN "LOCKED OUT" OR MADE NON-OPERATIONAL SO THAT IT CANNOT BE STARTED WHILE WORK IS BEING DONE ON PUMP.
3. THAT YOU KNOW WHAT LIQUID THE PUMP HAS BEEN HANDLING AND THE PRECAUTIONS NECESSARY TO SAFELY HANDLE THE LIQUID. OBTAIN A MATERIAL SAFETY DATA SHEET (MSDS) FOR THE LIQUID TO BE SURE THESE PRECAUTIONS ARE UNDERSTOOD.

FAILURE TO FOLLOW ABOVE LISTED PRECAUTIONARY MEASURES MAY RESULT IN SERIOUS INJURY OR DEATH.

1. Mark head and casing before disassembly to insure proper reassembly. The idler pin, which is offset in pump head, must be positioned toward and equal distance between port connections to allow for proper flow of liquid through pump.

   Remove head from pump. ***Do not allow idler to fall from idler pin.*** Tilt top of head back when removing to prevent this. Avoid damaging head gasket. If pump is furnished with pressure relief valve, it need not be removed from head or disassembled at this point. **Refer to Pressure Relief Valve Instructions,** page 11.

   If LS pump has jacketed head plate, it will separate from head when it is removed. The gasket between head and jacket head plate must be totally removed. Use new gasket when assembling pump. Q, QS, and M pumps have one piece gasket.

2. Remove idler and bushing assembly.
3. Insert length of hardwood or brass through port opening between rotor teeth to keep shaft from turning. Bend up tang of lockwasher and with a spanner wrench remove locknut and lockwasher from shaft.
4. Standard Mechanical Seal (synthetic rubber bellows type) uses a set collar behind the seal spring. Two setscrews must be loosened before shaft can be removed. Access to collar setscrews is through seal access hole on right hand side of mounting bracket (viewed from shaft end, **Refer to Figure 6.**)
5. Tap shaft forward approximately 0.5 inch and remove pair of half round rings under inner spacer collar. There is no pair of half round rings on Q, QS and M size pumps. **Refer to Figure 7.**
6. Carefully remove rotor and shaft to avoid damaging bracket bushing.
7. Remove seal holder and seal holder plate.
8. The seal seat and rotary member of the seal can now be removed from the side opening of bracket.

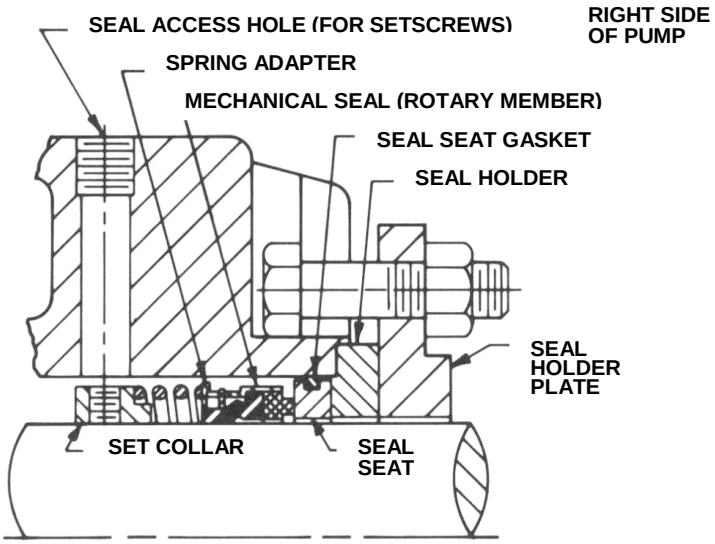

FIGURE 6 – STANDARD MECHANICAL SEAL

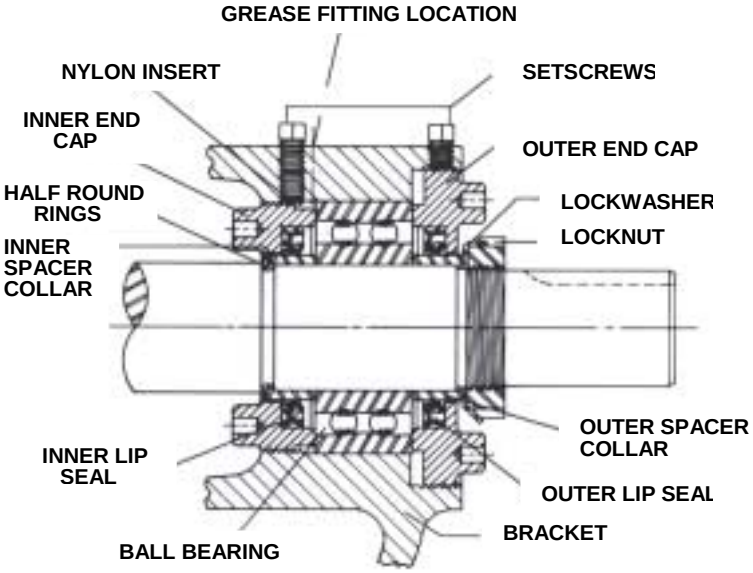

FIGURE 7

9. Loosen the four setscrews over the outer and inner end caps. Remove both end caps, spacer collars and ball bearing. **Refer to Figure 7.** The inner end cap can be removed through the side openings in the bracket.

10. Clean all parts thoroughly and examine for wear or damage. Check lip seals, ball bearing, bushing and idler pin and replace if necessary. Check all other parts for nicks, burrs, excessive wear and replace if necessary. Wash bearings in clean solvent. Blow out bearings with compressed air. Do not allow bearings to spin; turn them slowly by hand. Spinning bearings will damage race and balls. Make sure bearings are clean, then lubricate with non-detergent SAE 30 weight oil and check for roughness. Roughness can be determined by turning outer race by hand.

Be sure shaft is free from nicks, burrs and foreign particles that might damage bracket bushing. Scratches on shaft in seal area will provide leakage paths under mechanical seal.

11. Casing can be checked for wear or damage while mounted on bracket.

ASSEMBLY

Standard Mechanical Seal
(Synthetic Rubber Bellows Type)

The seal used in this pump is simple to install and good performance will result if care is taken during installation.

The principle of the mechanical seal is contact between the rotary and stationary members. These parts are lapped to a high finish and their sealing effectiveness depends on complete contact.

Viking furnishes a number of heavy-duty pumps with special mechanical seals installed in the packing end of the pump. These special seals are not discussed in **TSM 141.2.** Information is available by contacting the factory. When requesting special seal information, be sure to give pump model number and serial number.

1. Install bracket bushing. If bracket bushing has a lubrication groove, install bushing with groove at 6:00 o'clock position in bracket. If carbon graphite, **Refer to Installation of Carbon Graphite Bushings,** page 11.

2. Coat rotor shaft with non-detergent SAE 30 weight oil. Start end of shaft in bracket bushing and turn from right to left, slowly pushing until the ends of the rotor teeth are just below the face of the casing.

3. Using a .015 inch head gasket, install head and idler assembly on pump. Pump head and casing were marked before disassembly to insure proper reassembly. If not, be sure idler pin, which is offset in pump head, is positioned toward and equal distance between port connections to allow for proper flow of liquid through pump.

If pump is equipped with jacketed head plate, install at this time along with new gasket.

Tighten head capscrews evenly.

If pump was equipped with a relief valve and it was removed during disassembly, install on head with new gaskets. Relief valve adjusting screw cap must always point toward suction port. **Refer to Figures 1, 2 and 3** on page 1. For relief valve repair or adjustments, **Refer to Pressure Relief Valve Instructions,** page 11.

4. Clean rotor shaft and bracket seal housing bore. Be sure they are free of dirt, grit and scratches. Gently radius leading edge of shaft diameter over which seal must be placed.

5. Install seal set collar. Examine set collar for burrs or scratches, and setscrews are withdrawn to prevent shaft from being scratched when set collar is installed. Place set collar onto shaft, push into seal chamber until centerline of setscrews coincides with centerline of tapped seal access holes on right side of bracket (viewed from shaft end).

Tighten all setscrews securely to shaft. **Refer to Figure 8.**

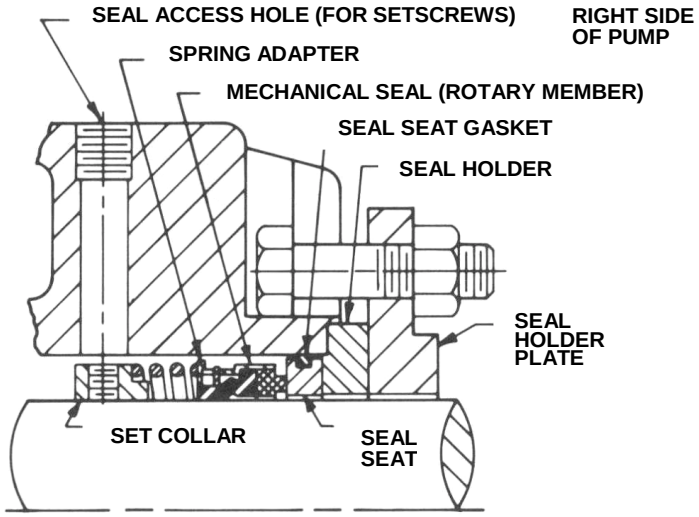

FIGURE 8 – STANDARD MECHANICAL SEAL

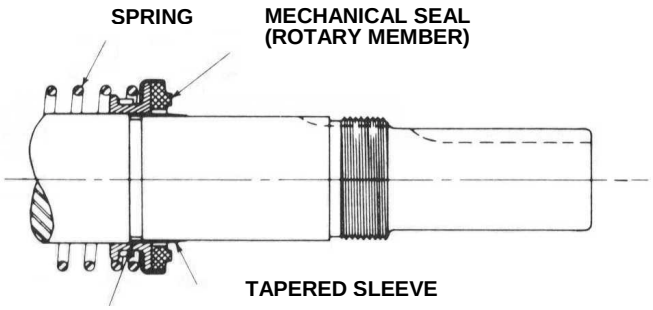

COAT WITH LIGHT OIL BEFORE ASSEMBLY

FIGURE 9

6. Sealing faces on mechanical seals should not be touched with anything but fingers or a clean cloth. A tapered sleeve is available, at extra cost, for Q, QS and M pumps from Viking Pump for seal installation on shaft. **Refer to Figure 9.**
LS pump shaft is tapered and an installation sleeve is not available.

7. Install rotating member of seal. Slide spring over shaft into seal chamber and onto set collar pilot. Center spring adapter (Q, QS and M size only) against back of metal retainer so spring will push against adapter and not work itself over back of mechanical seal. Place tapered sleeve on shaft.
Refer to Figure 9. Apply a liberal coating of SAE-30 non-detergent oil to large diameter portion of shaft, tapered sleeve and to inside diameter of seal rubber parts. Start rotary member, carbon face out, onto shaft and push along shaft until spring is centered against adapter.

Install Stationary Seal Seat. Lubricate outside diameter of seal o-ring seat gasket and flush lapped face with lube oil.
Press stationary seat into bore until lapped face is just inside bore. Position stationary seat by installing seal holder and secure to machined face of bracket with seal holder plate. Tighten nuts securing seal holder evenly so seal holder will not be distorted. **Refer to Figure 8**.

Remove tapered installation sleeve.

8. Slide inner spacer collar over shaft with recessed end facing rotor. Q, QS and M size bearing spacer collars are not recessed.
Place pair of half round rings on shaft and slide inner bearing spacer collar over half round rings to lock them in place. There is no pair of half round rings on Q, QS and M size pumps. **Refer to Figure 7,** page 8.

9. Press lip seal, lip facing end of shaft, in inner end cap and insert end cap through shaft end of bracket. Turn end cap clockwise, looking at shaft end, until it engages threads. End cap spanner wrench holes must be facing rotor. Turn end cap with spanner wrench until it projects slightly from opening on side of bracket. End cap must not be turned so far that lip seal drops off end of spacer collar on shaft or end cap becomes disengaged from threads. **Refer to Figure 7,** page 8.

If this happens, remove inner spacer collar, half round rings and end cap and start over at Step 8.

10. Pack ball bearing with multi-purpose grease, NLGI #2. Place on shaft and push or gently drive in place in bracket.

11. Press lip seal, lip facing end of shaft, in outer end cap and insert end cap in bracket. Turn end cap in bracket until it is tight against bearing. **Refer to Figure 7,** page 8.

12. Put lockwasher and locknut on shaft. Insert length of hardwood or brass through port opening between rotor teeth to keep shaft from turning. Tighten locknut to 120-150 ft.– lbs. Torque (LS) or 170-190 ft. – lbs. Torque (Q, QS, M). Bend one tang of lockwasher into slot of locknut. If tang does not line up with slot, tighten locknut until it does. Failure to tighten locknut or engage lockwasher tang could result in early bearing failure and cause damage to rest of pump.
Remove length of hardwood or brass from port opening.

13. Adjust pump end clearance. **Refer to Thrust Bearing Adjustment,** page 10.

14. Lubricate all grease fittings with multi-purpose grease, NLGI #2.

DANGER

BEFORE STARTING PUMP, BE SURE ALL DRIVE EQUIPMENT GUARDS ARE IN PLACE.

FAILURE TO PROPERLY MOUNT GUARDS MAY RESULT IN SERIOUS INJURY OR DEATH.

ASSEMBLY

Optional Mechanical Seal
(Teflon Fitted Type)

The seal type shown in **Figures 10** can be installed as an alternate to the standard mechanical seal (synthetic rubber bellows type). This seal is setscrew driven, is simple to install and good performance will result if care is taken during installation.

Clean rotor shaft and seal housing bore. Make sure they are free of dirt, grit and scratches. Gently radius leading edge of shaft diameter over which seal is to be placed.

A tapered sleeve is available, at extra cost, for Q, QS and M pumps from Viking Pump for seal installation on shaft. LS size pump shaft is tapered and installation sleeve is not available. Place tapered sleeve on shaft, **Refer to Figure 11.**

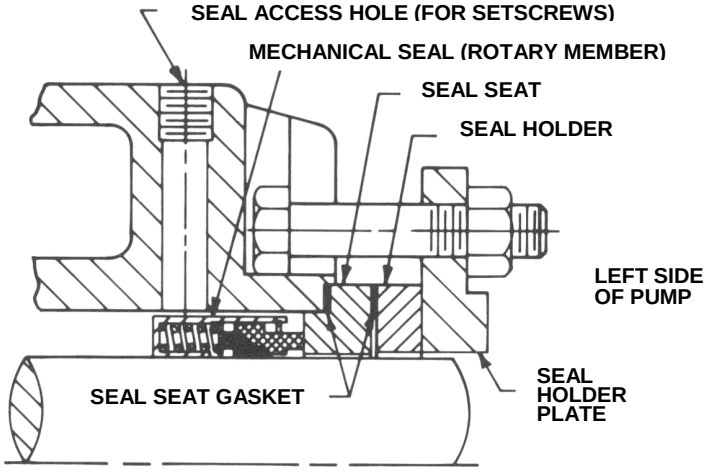

FIGURE 10 – OPTIONAL MECHANICAL SEAL

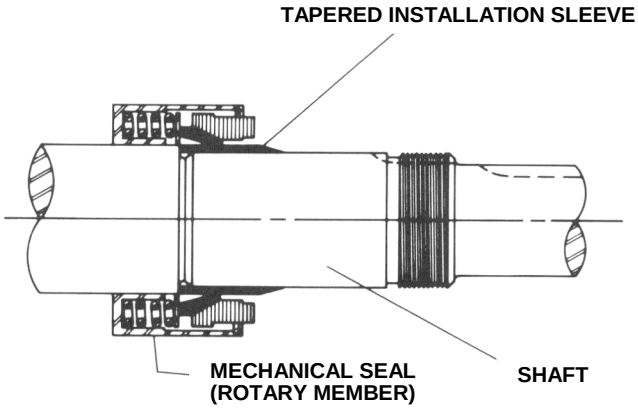

FIGURE 11

Never touch sealing faces with anything except clean hands or clean cloth. Minute particles can scratch the seal faces and cause leakage.

Coat tapered sleeve and inside of the rotary member with a generous quantity of SAE 30 non-detergent oil. Grease is not recommended. Start rotary member on shaft and over tapered sleeve.

Move rotary member so setscrews are directly below seal access holes on left side of bracket (viewed from shaft end) **Refer to Figure 10.** Tighten all setscrews securely to shaft. Flush sealing faces of both rotary member and seal seat with oil and install seal seat and seat gasket over end of shaft against machined bracket face. Assemble other seal seat gasket, seal holder, seal holder plate, capscrews and nuts and tighten securely. Remove tapered installation sleeve.

Some Teflon seals are equipped with holding clips which compress the seal springs. Remove holding clips to release springs after seal is installed on shaft.

AT THIS POINT, FINISH ASSEMBLY PROCEDURES STARTING AT STEP 8, PAGE 9 (STANDARD MECHANICAL SEAL).

THRUST BEARING ADJUSTMENT

Refer to Figure 13.

1. Loosen two setscrews over each outer and inner end caps.
2. Turn inner end cap clockwise (viewed from shaft end) until it projects slightly into opening on side of bracket exposing approximately three threads.
3. Turn outer end cap clockwise until rotor is tight against head and rotor shaft cannot be turned.
4. Make a reference mark on bracket end, opposite a notch on outer end cap. Back off outer end cap required number of notches as shown in Total End Clearance Chart. **Refer to Figure 11.** Each notch represents .002" end clearance.
5. High viscosity liquids require additional end clearances. The amount of extra end clearance depends on the viscosity of the liquid pumped. For specific recommendations contact factory.
6. Tighten inner end cap with a spanner wrench. Tap spanner wrench lightly but **DO NOT OVER-TIGHTEN** as it will damage threads.
7. Tighten set screws that hold inner and outer end caps to prevent their turning in bracket.
8. Check rotor to determine if it turns freely; if it does not, add more end clearance.

TOTAL END CLEARANCE CHART		
PUMP SIZE	TURN OUTER END CAP COUNTER-CLOCKWISE NO. OF NOTCHES	TOTAL END CLEARANCE
LS	2 .5	.005
Q, QS AND M	5	.010

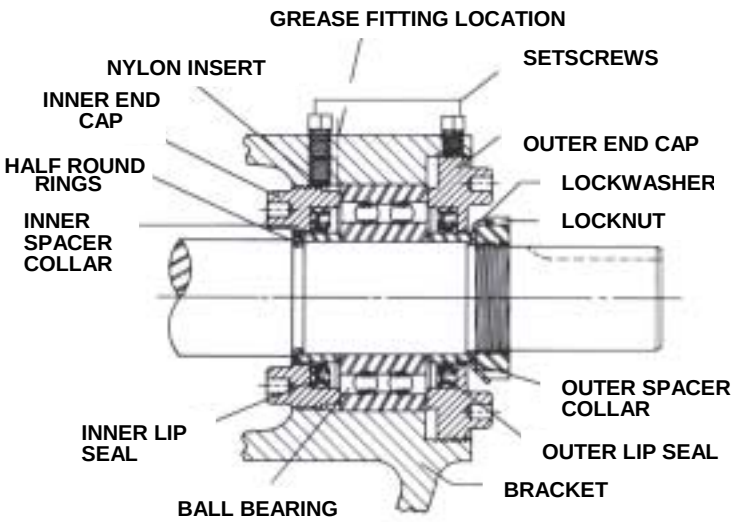

FIGURE 13

INSTALLATION OF CARBON GRAPHITE BUSHINGS

When installing carbon graphite bushings, extreme care must be taken to prevent breaking. Carbon graphite is a brittle material and easily cracked. If cracked, the bushing will quickly disintegrate. Using a lubricant and adding a chamfer on the bushing and the mating part will help in installation. The additional precautions listed below must be followed for proper installation:

1. A press must be used for installation.
2. Be certain bushing is started straight.
3. Do not stop pressing operation until bushing is in proper position. starting and stopping will result in a cracked bushing.
4. Check bushing for cracks after installation.

Carbon graphite bushings with extra interference fits are frequently furnished for high temperature operation. These bushings must be installed by a shrink fit.

1. Heat bracket or idler to **750** °F.
2. Install cool bushings with a press.
3. If facilities are not available to reach **750** °F. temperature, it is possible to install with **450** °F. temperature; however, the lower the temperature, the greater the possibility of cracking bushing.

Consult factory with specific questions on high temperature applications. **Refer to Engineering Service Bulletin ESB-3.**

PRESSURE RELIEF VALVE INSTRUCTIONS

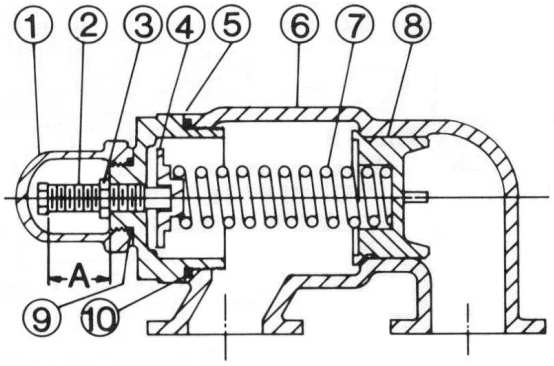

FIGURE 14
Size LS

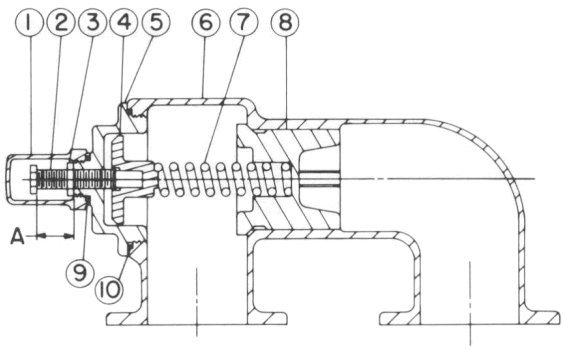

FIGURE 15
SIZE Q, QS AND M

LIST OF PARTS			
1.	Valve Cap	**6.**	Valve Body
2.	Adjusting Screw	**7.**	Valve Spring
3.	Lock Nut	**8.**	Poppet
4.	Spring Guide	**9.**	Cap Gasket
5.	Bonnet	**10.**	Bonnet

DISASSEMBLY

DANGER

BEFORE OPENING ANY VIKING PUMP LIQUID CHAMBER (PUMPING CHAMBER, RESERVOIR, RELIEF VALVE ADJUSTING CAP FITTING ETC.) BE SURE:

1. THAT ANY PRESSURE IN CHAMBER HAS BEEN COMPLETELY VENTED THROUGH SUCTION OR DISCHARGE LINES OR OTHER APPROPRIATE OPENINGS OR CONNECTIONS.
2. THAT THE DRIVING MEANS (MOTOR, TURBINE, ENGINE, ETC.) HAS BEEN "LOCKED OUT" OR MADE NON-OPERATIONAL SO THAT IT CANNOT BE STARTED WHILE WORK IS BEING DONE ON PUMP.
3. THAT YOU KNOW WHAT LIQUID THE PUMP HAS BEEN HANDLING AND THE PRECAUTIONS NECESSARY TO SAFELY HANDLE THE LIQUID. OBTAIN A MATERIAL SAFETY DATA SHEET (MSDS) FOR THE LIQUID TO BE SURE THESE PRECAUTIONS ARE UNDERSTOOD.

FAILURE TO FOLLOW ABOVE LISTED PRECAUTIONARY MEASURES MAY RESULT IN SERIOUS INJURY OR DEATH.

DISASSEMBLY

Mark valve and head before disassembly to insure proper reassembly.

1. Remove valve cap.
2. Measure and record length of extension of adjusting screw. **Refer to "A" on Figures 14 and 15.**
3. Loosen locknut and back out adjusting screw until spring pressure is released.
4. Remove bonnet, spring guide, spring and poppet from valve body. Clean and inspect all parts for wear or damage and replace as necessary.

DANGER

BEFORE STARTING PUMP, BE SURE ALL DRIVE EQUIPMENT GUARDS ARE IN PLACE.

FAILURE TO PROPERLY MOUNT GUARDS MAY RESULT IN SERIOUS INJURY OR DEATH.

PRESSURE ADJUSTMENT

If a new spring is installed or if pressure setting of pressure relief valve is to be changed from that which the factory has set, the following instructions must be carefully followed.

1. Carefully remove valve cap which covers adjusting screw.

   Loosen locknut which locks adjusting screw so pressure setting will not change during operation of pump.
2. Install a pressure gauge in discharge line for actual adjustment operation.
3. Turn adjusting screw in to increase pressure and out to decrease pressure.
4. With discharge line closed at a point beyond pressure gauge, gauge will show maximum pressure valve will allow while pump is in operation.

IMPORTANT

In ordering parts for pressure relief valve, always give model number and serial number of pump as it appears on nameplate and name of part wanted. When ordering springs, be sure to give pressure setting desired.

WARRANTY

Viking warrants all products manufactured by it to be free from defects in workmanship or material for a period of one (1) year from date of startup, provided that in no event shall this warranty extend more than eighteen (18) months from the date of shipment from Viking. If, during said warranty period, any products sold by Viking prove to be defective in workmanship or material under normal use and service, and if such products are returned to Viking's factory at Cedar Falls, Iowa, transportation charges prepaid, and if the products are found by Viking to be defective in workmanship or material, they will be replaced or repaired free of charge, FOB. Cedar Falls, Iowa.

Viking assumes no liability for consequential damages of any kind and the purchaser by acceptance of delivery assumes all liability for the consequences of the use or misuse of Viking products by the purchaser, his employees or others. Viking will assume no field expense for service or parts unless authorized by it in advance.

Equipment and accessories purchased by Viking from outside sources which are incorporated into any Viking product are warranted only to the extent of and by the original manufacturer's warranty or guarantee, if any.

THIS IS VIKING'S SOLE WARRANTY AND IS IN LIEU OF ALL OTHER WARRANTIES, EXPRESSED OR IMPLIED, WHICH ARE HEREBY EXCLUDED, INCLUDING IN PARTICULAR ALL WARRANTIES OF MERCHANTABILITY OR FITNESS FOR A PARTICULAR PURPOSE. No officer or employee of IDEX Corporation or Viking Pump, Inc. is authorized to alter this warranty.

VIKING PUMP INC. •
Copyright© 2000 •