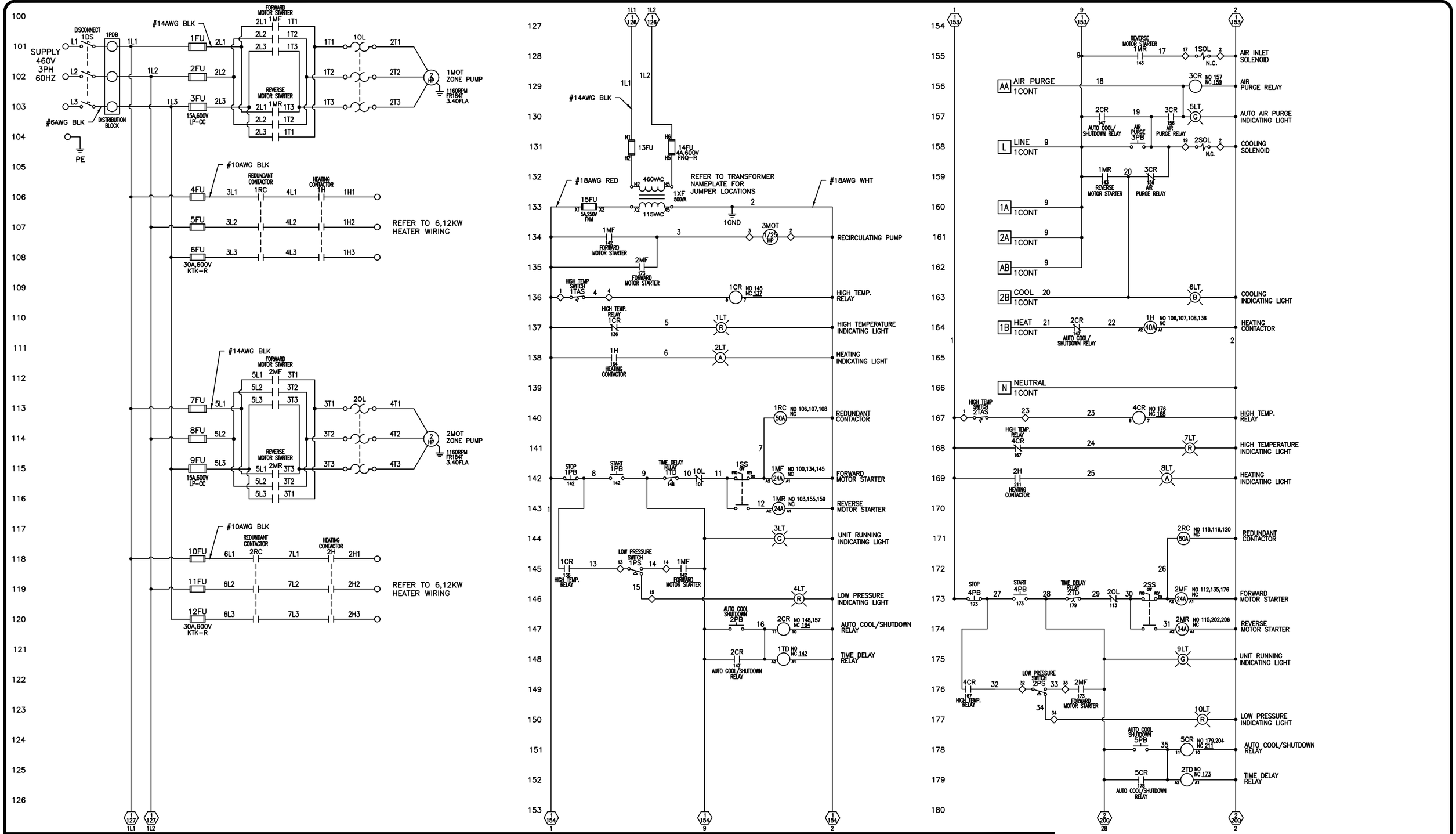

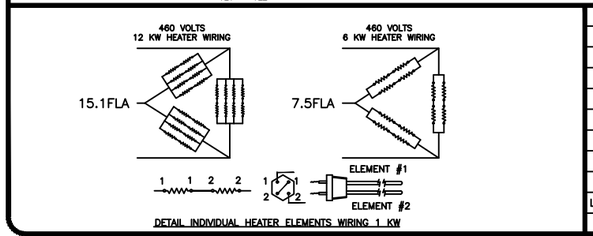

LTR	DESCRIPTION	BY	DATE	ECN NO.

REVISIONS

NOTES:
1.) ALL VOLTAGES ARE "AC" UNLESS OTHERWISE SPECIFIED.
2.) USE FUSES SPECIFIED OR EQUIVALENT.
3.) LAST WIRE NUMBER IS 41
4.) ◇ INDICATES TERMINAL BLOCK CONNECTION.
5.) REVERSING MOTOR STARTER EQUIPPED WITH MECHANICAL INTERLOCK

PROPRIETARY NOTICE

THE INFORMATION IN THIS DOCUMENT IS PROPRIETARY TO MOKON AND SHALL NOT BE USED OR REPRODUCED FOR ANY REASON WITHOUT PRIOR WRITTEN CONSENT.

REFERENCE MODEL	DRAWN	D. KNOWL	07/05/18
H54218UU	CHECKED	DH	07/05/18
460V/3PH/60HZ	APPROVED	DH	07/05/18
	VERIFIED		

DESCRIPTION
ELECTRICAL SCHEMATIC/PANEL LAYOUT: 18KW DUAL ZONE OIL UNIT

MOKON

2150 Elmwood Avenue, Buffalo, New York 14207

REV	MODEL NO.	DWG. NO.
0	H54218AFB	H54218AFB

SCALE: NONE | DWG SIZE: B | SHEET 1 OF 4

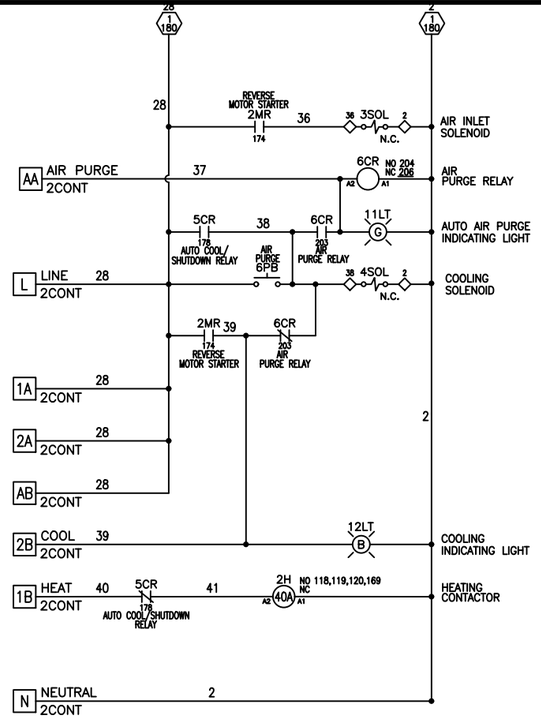

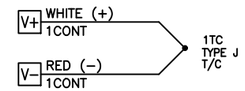

1CONT

1A		CT	AA
1B		C	AB
2A		LA	AC
2B		HD	VI
L		HE	V+
N		HF	V−

3216 CONTROLLER

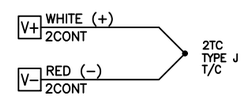

2CONT

1A		CT	AA
1B		C	AB
2A		LA	AC
2B		HD	VI
L		HE	V+
N		HF	V−

3216 CONTROLLER

ITEM	MOKON P/N	QTY	DESCRIPTION
1XF	024105	1	TFMR 500VA 240X480/120x240
1TAS 2TAS	023070	2	TEMPERATURE SWITCH
	026529	20	TERMINAL BLOCK
1TD 2TD	006239	2	TIME DELAY RELAY
1TC 2TC	040002	2	TYPE J THERMOCOUPLE (GROUNDED)
2SOL 4SOL	025432	2	SOLENOID VALVE 1/2"
1SOL 3SOL	025275	2	SOLENOID VALVE 1/8"
1SS 2SS	022179	2	3 POS. SELECTOR SWITCH
1RC 2RC	006266	2	REDUNDANT CONTACTOR
1PS 2PS	022142	2	LOW PRESSURE SWITCH
1PB 4PB	022038	2	PUSH BUTTON – START/STOP
2PB 3PB 5PB 6PB	022185	4	PUSH BUTTON – BLACK
1OL 2OL	006366	2	OVERLOAD 1.0–5.0A
1MR 2MR	006256	2	CONTACTOR 24A
1MOT 2MOT	030003	2	MOTOR
3MOT	032088	1	PUMP WITH MOTOR
1MF 2MF	006256	2	CONTACTOR 24A
10LT 1LT 4LT 7LT	014162	4	RED INDICATING LIGHT
11LT 3LT 5LT 9LT	014166	4	GREEN INDICATING LIGHT
12LT 6LT	014163	2	BLUE INDICATING LIGHT
2LT 8LT	014164	2	AMBER INDICATING LIGHT
1GND	026462	1	GROUND BAR
1FU 2FU 3FU 7FU 8FU 9FU	045043	6	FUSE 15A LP–CC
13FU 14FU	026513	2	FUSE 4A FNQ–R
10FU 11FU 12FU 4FU 5FU 6FU	026298	6	FUSE 30A KTK–R
15FU	026046	1	FUSE 5A FNM
1H 2H	006257	2	CONTACTOR 40A
1DS	022269	1	DISCONNECT 63A DOOR MOUNT
1PDB	026475	1	DISTRIBUTION BLOCK 115A
1CONT 2CONT	040472	2	CONTROLLER
1CR 4CR	006453	2	RELAY 2PDT 10A 120V
3CR 6CR	006289	2	RELAY SPDT 6A
2CR 5CR	006250	2	RELAY 3PDT 10A 120V

LTR	DESCRIPTION	BY	DATE	ECN NO.

REVISIONS

NOTES:
1.) ALL VOLTAGES ARE "AC" UNLESS OTHERWISE SPECIFIED.
2.) USE FUSES SPECIFIED OR EQUIVALENT.
3.) LAST WIRE NUMBER IS 41
4.) ◇ INDICATES TERMINAL BLOCK CONNECTION.
5.) REVERSING MOTOR STARTER EQUIPPED WITH MECHANICAL INTERLOCK

PROPRIETARY NOTICE

THE INFORMATION IN THIS DOCUMENT IS PROPRIETARY TO MOKON AND SHALL NOT BE USED OR REPRODUCED FOR ANY REASON WITHOUT PRIOR WRITTEN CONSENT.

REFERENCE MODEL	DRAWN	D. KNOWL	07/05/18
H54218UU	CHECKED	DH	07/05/18
460V/3PH/60HZ	APPROVED	DH	07/05/18
	VERIFIED		

DESCRIPTION
ELECTRICAL SCHEMATIC/PANEL LAYOUT: 18KW DUAL ZONE OIL UNIT

MOKON

2150 Elmwood Avenue, Buffalo, New York 14207

REV 0 | MODEL NO. H54218AFB | DWG. NO. H54218AFB

SCALE: NONE | DWG SIZE: B | SHEET 2 OF 4

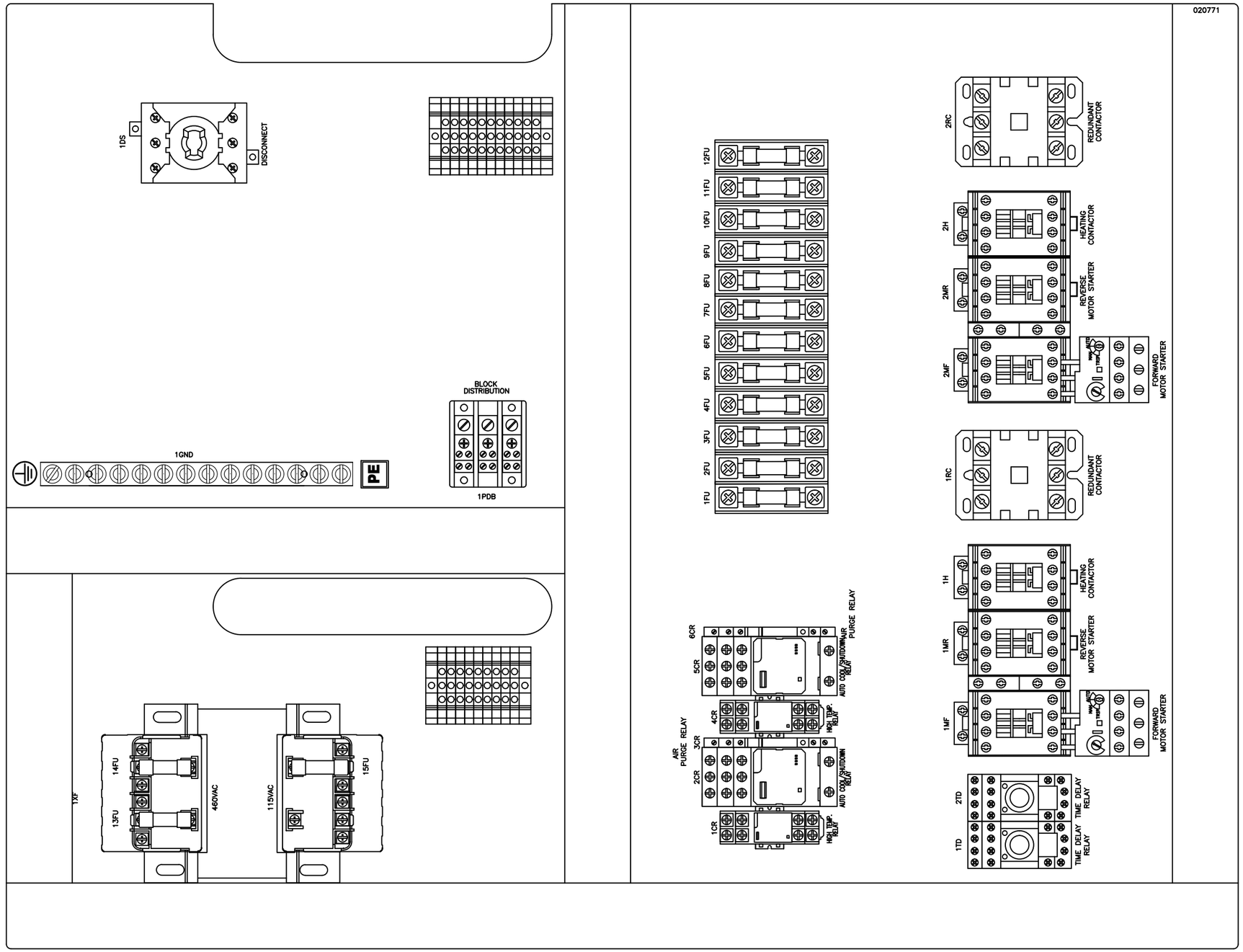

LTR	DESCRIPTION	BY	DATE	ECN NO.

REVISIONS

NOTES:
1.) ALL VOLTAGES ARE "AC" UNLESS OTHERWISE SPECIFIED.
2.) USE FUSES SPECIFIED OR EQUIVALENT.
3.) LAST WIRE NUMBER IS 41
4.) ◇ INDICATES TERMINAL BLOCK CONNECTION.
5.) REVERSING MOTOR STARTER EQUIPPED WITH MECHANICAL INTERLOCK

PROPRIETARY NOTICE

THE INFORMATION IN THIS DOCUMENT IS PROPRIETARY TO MOKON AND SHALL NOT BE USED OR REPRODUCED FOR ANY REASON WITHOUT PRIOR WRITTEN CONSENT.

REFERENCE MODEL	DRAWN	D. KNOWL	07/05/18
H54218UU	CHECKED	DH	07/05/18
460V/3PH/60HZ	APPROVED	DH	07/05/18
	VERIFIED		

DESCRIPTION
ELECTRICAL SCHEMATIC/PANEL LAYOUT: 18KW DUAL ZONE OIL UNIT

MOKON

2150 Elmwood Avenue, Buffalo, New York 14207

REV 0 | MODEL NO. H54218AFB | DWG. NO. H54218AFB

SCALE: NONE | DWG SIZE: B | SHEET 3 OF 4

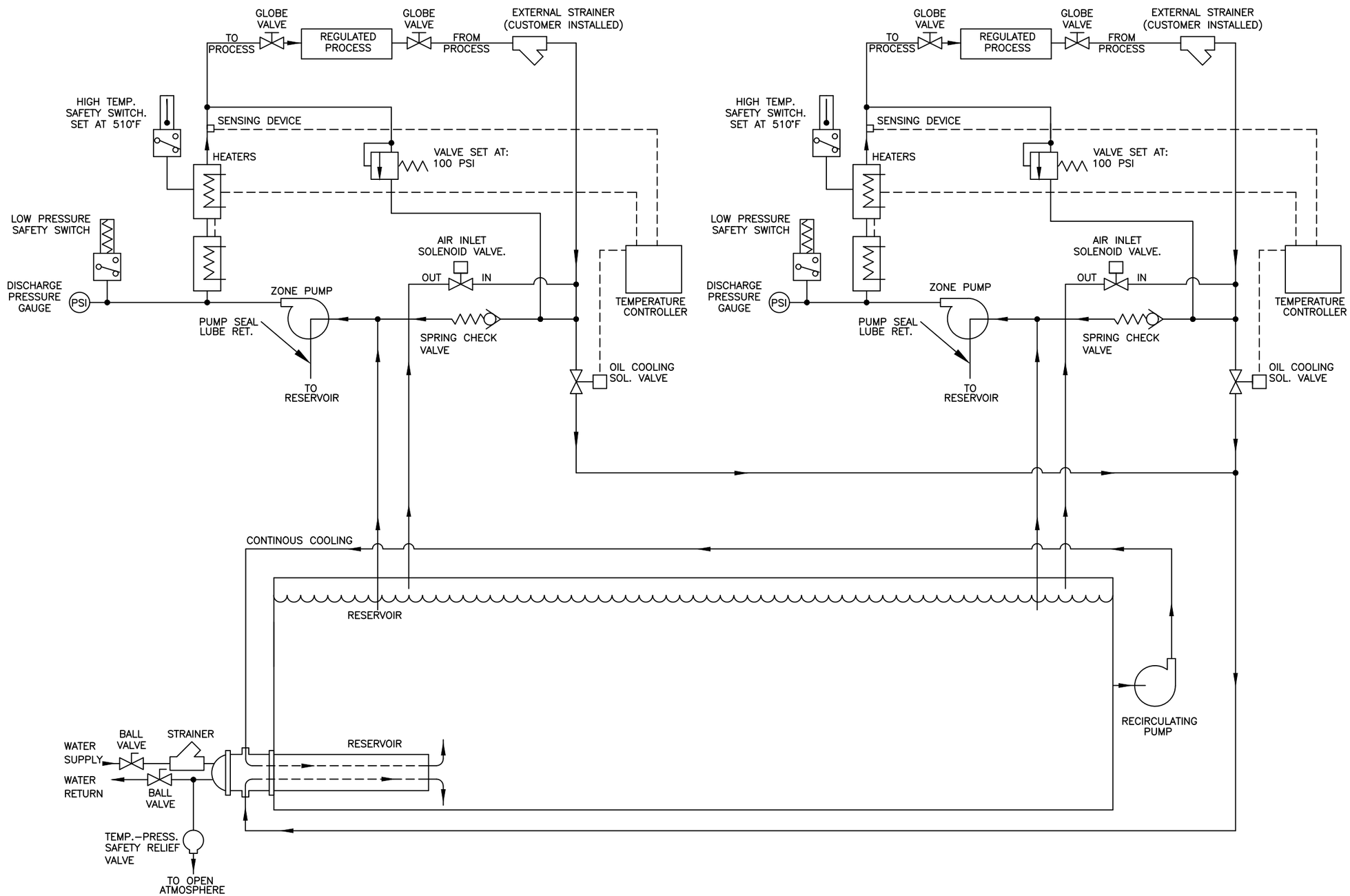

LTR	DESCRIPTION	BY	DATE	ECN NO.

REVISIONS

NOTES:

PROPRIETARY NOTICE

THE INFORMATION IN THIS DOCUMENT IS PROPRIETARY TO MOKON AND SHALL NOT BE USED OR REPRODUCED FOR ANY REASON WITHOUT PRIOR WRITTEN CONSENT.

REFERENCE MODEL	DRAWN	D. KNOWL	07/05/18
H54218UU	CHECKED	DH	07/05/18
460V/3PH/60HZ	APPROVED	DH	07/05/18
	VERIFIED		

DESCRIPTION
ELECTRICAL SCHEMATIC/PANEL LAYOUT: 18KW DUAL ZONE OIL UNIT

MOKON

2150 Elmwood Avenue, Buffalo, New York 14207

REV	MODEL NO.	DWG. NO.
0	H54218AFB	H54218AFB

SCALE: NONE | DWG SIZE: B | SHEET 4 OF 4