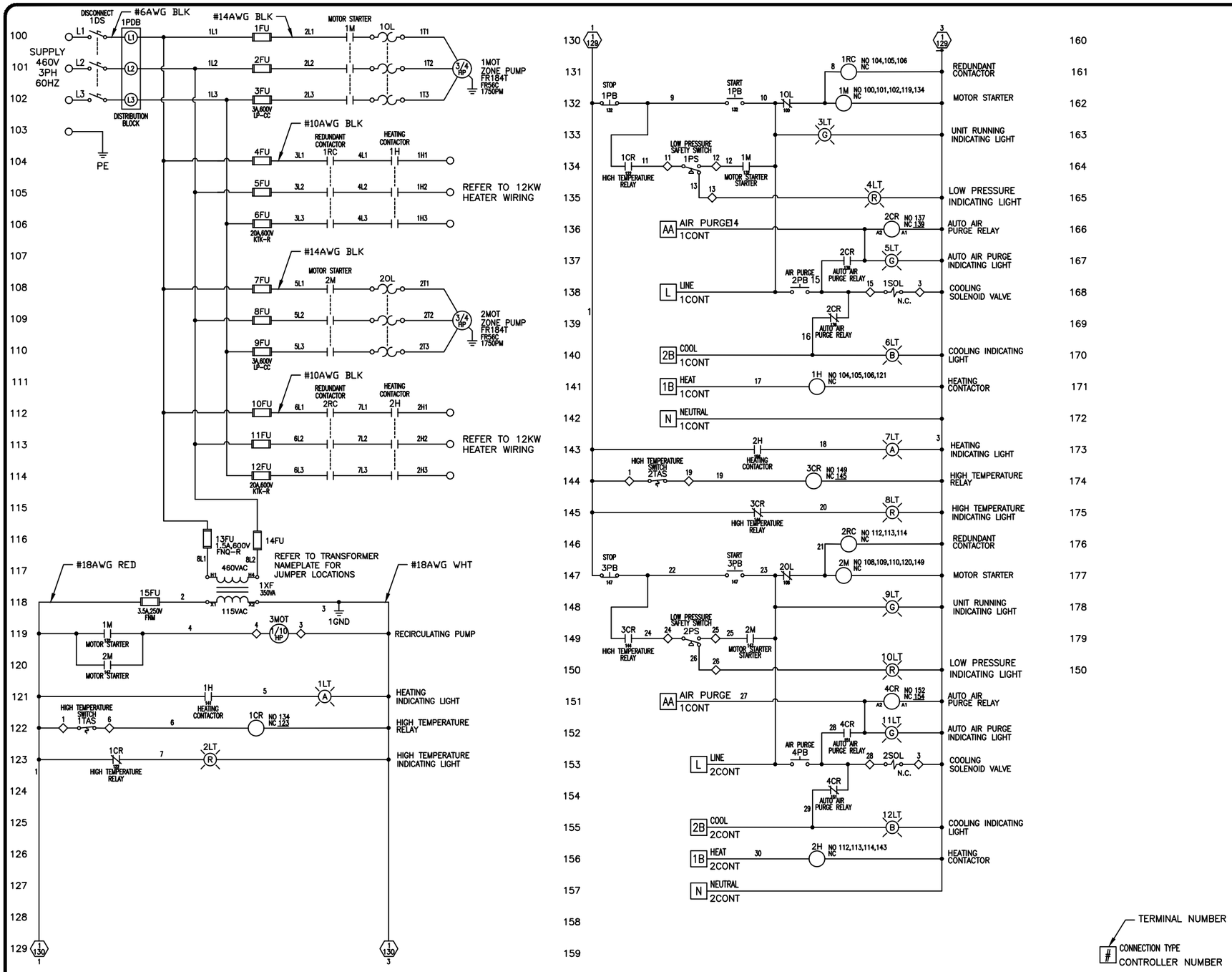

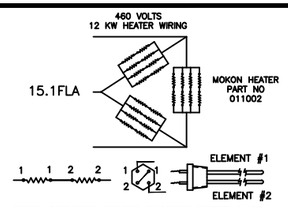

LTR	DESCRIPTION	BY	DATE	ECN NO.
A	UPDATED TO CURRENT STANDARDS	JPM	01/05/11	

REVISIONS

NOTES:
1.) ALL VOLTAGES ARE "AC" UNLESS OTHERWISE NOTED.
2.) USE FUSES SPECIFIED OR EQUIVALENT.
3.) LAST WIRE NUMBER IS 36.
4.) ◇ INDICATES TERMINAL BLOCK CONNECTION.

PROPRIETARY NOTICE

THE INFORMATION IN THIS DOCUMENT IS PROPRIETARY TO MOKON AND SHALL NOT BE USED OR REPRODUCED FOR ANY REASON WITHOUT PRIOR WRITTEN CONSENT.

DRAWN	C.YERKOVICH	6/3/04
CHECKED	CY	6/3/04
APPROVED	RE	6/7/04
VERIFIED	JN	

DESCRIPTION
ELECTRICAL SCHEMATIC/PANEL LAYOUT:
2 ZONE CUSTOM OIL UNIT
460V/3PH/60HZ 12KW WITH EUROTHERM CONTROLLER

MOKON

2150 Elmwood Avenue, Buffalo, New York 14207

B-SIZE | MODEL NO. 320083 | DWG. NO. 130-2655

SCALE: NONE | SHEET 1 OF 3

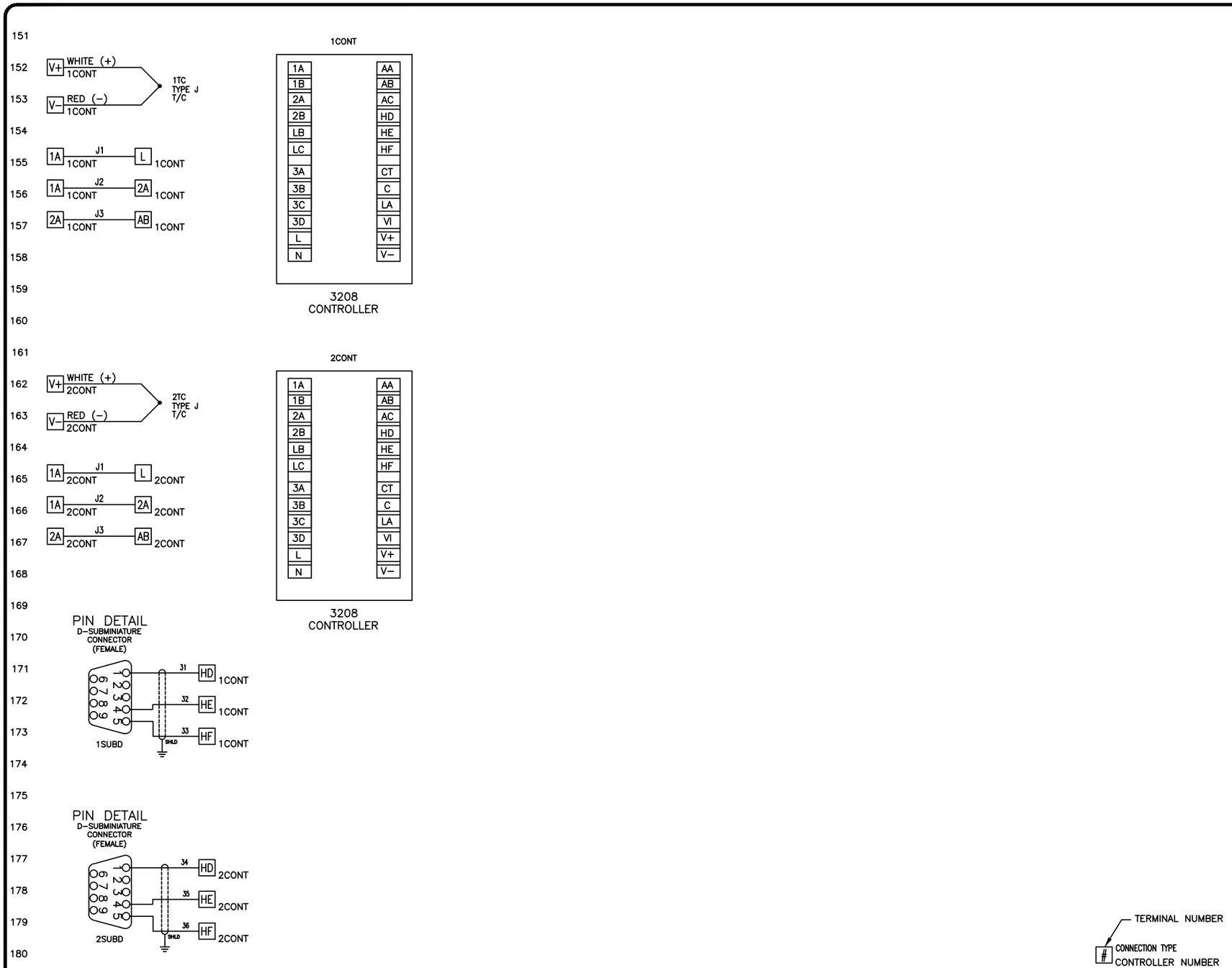

ITEM	QTY	MOKON PN	DESCRIPTION
1XF	1	024042	TRANSFORMER 350VA
1TAS 2TAS	2	023070	TEMPERATURE SWITCH
	16	026529	TERMINAL BLOCK
1TC 2TC	2	040002	TYPE J THERMOCOUPLE (GROUNDED)
1SOL 2SOL	2	025107	SOLENOID VALVE 1/2" (NC)
1RC 2RC	2	006266	REDUNDANT CONTACTOR
1SUBD 2SUBD	2	022212	
1PS 2PS	2	022142	PRESSURE SWITCH
1PB 3PB	2	022038	
2PB 4PB	2	022185	
1OL 2OL	2	006366	OVERLOAD 1.0−5.0A
1M 2M	2	006256	CONTACTOR 24A
3MOT	1	032088	
1MOT 2MOT	2	032111	
1OLT 2LT 4LT 8LT	4	014162	RED INDICATING LIGHT
11LT 3LT 5LT 9LT	4	014166	GREEN INDICATING LIGHT
12LT 6LT	2	014163	BLUE INDICATING LIGHT
1LT 7LT	2	014164	AMBER INDICATING LIGHT
1GND	1	026462	
1FU 2FU 3FU 7FU 8FU 9FU	6	045028	FUSE 3A LP−CC
15FU	1	026523	FUSE 3−1/2A FNM
13FU 14FU	2	026395	FUSE 1−1/2A FNQ−R
10FU 11FU 12FU 4FU 5FU 6FU	6	026372	FUSE 20A KTK−R
1H 2H	2	006257	CONTACTOR 40A
1DS	1	022269	DISCONNECT 63A DOOR MOUNT
1PDB	1	026475	DISTRIBUTION BLOCK 115A
1CONT 2CONT	2	040490	CONTROLLER
2CR 4CR	2	006289	RELAY SPDT 6A
1CR 3CR	2	006250	RELAY 3PDT 10A 120V

LTR	DESCRIPTION	BY	DATE	ECN NO.
A	UPDATED TO CURRENT STANDARDS	JPM	01/05/11	

REVISIONS

NOTES:
1.) ALL VOLTAGES ARE "AC" UNLESS OTHERWISE NOTED.
2.) USE FUSES SPECIFIED OR EQUIVALENT.
3.) LAST WIRE NUMBER IS 36.
4.) ◇ INDICATES TERMINAL BLOCK CONNECTION.

PROPRIETARY NOTICE

THE INFORMATION IN THIS DOCUMENT IS PROPRIETARY TO MOKON AND SHALL NOT BE USED OR REPRODUCED FOR ANY REASON WITHOUT PRIOR WRITTEN CONSENT.

DRAWN	C.YERKOVICH	6/3/04
CHECKED	CY	6/3/04
APPROVED	RE	6/7/04
VERIFIED	JN	

DESCRIPTION
ELECTRICAL SCHEMATIC/PANEL LAYOUT:
2 ZONE CUSTOM OIL UNIT
460V/3PH/60HZ 12KW WITH EUROTHERM CONTROLLER

MOKON

2150 Elmwood Avenue, Buffalo, New York 14207

B-SIZE B | MODEL NO. 320083 | DWG. NO. 130−2655

SCALE: NONE | SHEET 2 OF 3

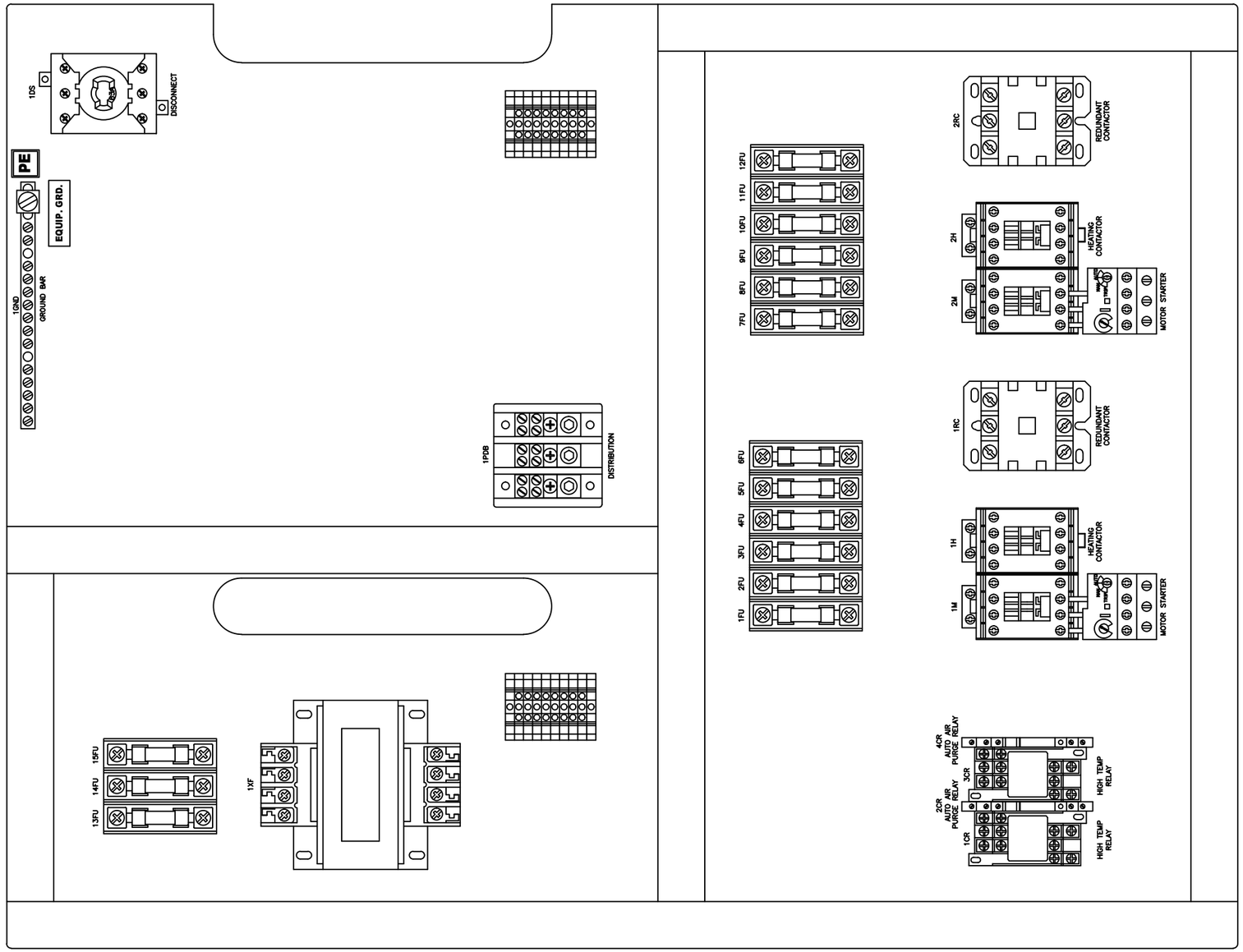

LTR	DESCRIPTION	BY	DATE	ECN NO.
A	UPDATED TO CURRENT STANDARDS	JPM	01/05/11	

REVISIONS

NOTES:
1.) ALL VOLTAGES ARE "AC" UNLESS OTHERWISE NOTED.
2.) USE FUSES SPECIFIED OR EQUIVALENT.
3.) LAST WIRE NUMBER IS 36.
4.) ◇ INDICATES TERMINAL BLOCK CONNECTION.

PROPRIETARY NOTICE

THE INFORMATION IN THIS DOCUMENT IS PROPRIETARY TO MOKON AND SHALL NOT BE USED OR REPRODUCED FOR ANY REASON WITHOUT PRIOR WRITTEN CONSENT.

DRAWN	C.YERKOVICH	6/3/04
CHECKED	CY	6/3/04
APPROVED	RE	6/7/04
VERIFIED	JN	

DESCRIPTION
ELECTRICAL SCHEMATIC/PANEL LAYOUT:
2 ZONE CUSTOM OIL UNIT
460V/3PH/60HZ 12KW WITH EUROTHERM CONTROLLER

MOKON
2150 Elmwood Avenue, Buffalo, New York 14207

B-SIZE B | MODEL NO. 320083 | DWG. NO. 130-2655
SCALE: NONE | SHEET 3 OF 3

REVISIONS				
LTR	DESCRIPTION	BY	DATE	APPROVED
A	UPDATED PROCESS TEXT	MW	11/23/11	

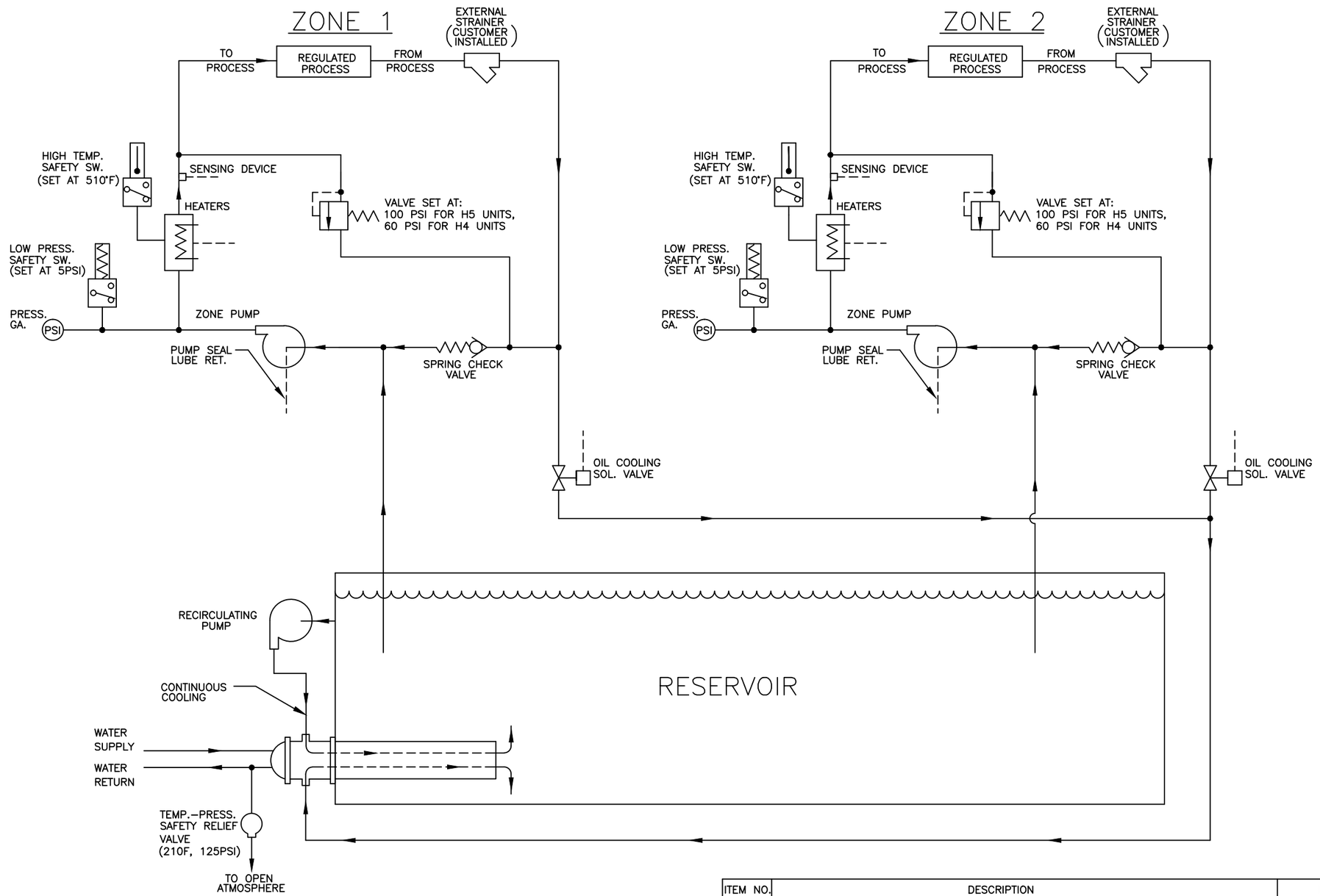

PROPRIETARY NOTICE

THE INFORMATION IN THIS DOCUMENT IS PROPRIETARY TO MOKON AND SHALL NOT BE USED OR REPRODUCED FOR ANY REASON WITHOUT PRIOR WRITTEN CONSENT.

ITEM NO.	DESCRIPTION			PART NO.
UNLESS OTHERWISE SPECIFIED	DRAWN	C.YERKOVICH	12/16/03	
.XX ± .010 .XXX ± .005 .XXXX ± ANGLES ± 1/2° RAD.& FILLETS.005-.015	CHECKED	CY	12/16/03	
	APP.	RE	12/16/03	
	VERIFIED	RC	7/19/06	

MOKON

2150 Elmwood Avenue, Buffalo, New York 14207

DESCRIPTION FLOW SCHEMATIC:
2 ZONE OIL UNIT WITH RECIRCULATING PUMP

C | MODEL NO. | DWG. NO. 120-1568

SCALE NONE | SHEET 1 OF 1

120-1568

CAD GENERATED DRAWING